[-]BHC

Parts List

Heat Pump Air Handler

Sizes 14-26

First Production Date June 2001

Published August 2001 PS **Form Number 92-24326-13-00**

CATALOG TAB - Air Handler

TABLE OF CONTENTS

Notes	Page 2
Model Number Explaination	Page 3 - 4
Serial Number Explaination	Page 3 - 4
Exploded View	Page 5 - 6
Panels & Sheet Metal Parts	Page 7
Blower Motor, Motor Bracket Kit, Capacitor	Page 8
Center Panel, Transformer, Blower Relay	Page 9
Sheath Heater and Bracket, Limit	Page 10-12
Finger Stop, Jumper Bar, Watt Resister	Page 13
Terminal Block, Circuit Breaker	Page 14
Sequencing Relay	Page 15

ORDERING, STOCKING AND NOTE EXPLANATIONS

Ordering Instructions:

When ordering a replacement part, be sure to read all notes and symbol notations on the parts list. In some cases, it is necessary to determine the unit style number and/or serial number in addition to the model number before selecting a replacement part. When ordering painted cabinet parts, the order **must specify** unit model number, serial number, and paint color. Also, your order can be processed more rapidly if you show the part number and description. Once the product is out of current production, ordering such parts must be cleared with the Parts Department as price and availability will vary.

Replacement Parts Stocking Information:

See the current "List Price Book For Air Conditioning Parts" for individual stock code information. As a general rule, most parts are in stock or have a short order period as long as the product is in current production. Once the product is out of current production, ordering such parts must be cleared with the Parts Department as price and availability will vary.

Note Explaination:

np	This part is not shown in exploded view. [**n**o **p**icture]
cr	This original part number has been **c**ross-**r**eferenced to an equal, or better than replacement, part number.
dna	**D**oes **n**ot **a**pply
fi	**Fi**nished Good Accy and must order thru the National Order Center
nw	This part was **ne**w to the List Price Book when the product was introduced
stk	This part should be **st**oc**k**ed.
()	Order quantity
lp	These parts are to be used only as repair parts for units which have been converted to LP (Propane) gas by the appropriate conversions kit.

MODEL NUMBER EXPLANATION

[-]	B	H	C	-	17	J	11	S	F	D
1	2	3	4	5	6	7	8	9	10	11

Position

1 **Trade Name**

2 **Blower Unit**

3 **Type Unit**

4 **Design Series**

5 **Dash**

6 **NOMINAL CABINET WIDTH**

14 = 14"
17 = 17"
21 = 21"
24 = 24"

High Heat

15 = 14"
18 = 17"
22 = 21"
26 = 24"

7 **ELECTRICAL DESIGNATION**

A = 115V, 1 Phase, 60 HZ
J = 208/230V, 1 Phase, 60HZ
C = 208/230V, 3 Phase, 60HZ
D = 460V, 3 Phase, 60HZ
(Some D Models Are 1 Phase)

8 **ELECTRICAL HEAT (KW) DESIGNATION**

(See Electrical Heat Data for actual KW at 208 Volts.)

00 = No Heat
06 = 4.9 kW
07 = 7.0 kW
09 = 9.8 kW
11 = 10.0 kW
13 = 12.5 kW
14 = 14.0 kW
18 = 17.5 kW
20 = 20.0 kW
21 = 21.0 kW
25 = 25.0 kW

9 **CONTROL DESIGNATION**

M = Circuit Breakers / Multi-Supply Circuit
N = No Circuit Breakers/Single Supply Circuit
S = Circuit Breaker(s) / Single Supply Circuit

10 **AIRFLOW DIRECTION**

F = Front Upflow Connection Options
H = Horizontal Left Front Connection Option

11 **COIL DESIGNATION**

A = Without Coil / With Casing
B, C, D, E, F, G, H = See Page 4

SERIAL NUMBER EXPLANATION

T	M	07	01	0	0	0	0	1
1	2	3	4	5	6	7	8	9

Position

1 **SEQUENCE MANUFACTURER**

T = Therm-o-disc
= No Sequence

2 **PRODUCTION LOCATION**

M = Milledgeville, GA

3 **WEEK**

4 **YEAR**

5,6,7,8,9 **PRODUCTION NUMBER**

Starts with 00001 and runs through 99999, then rolls back to 00001

MULTIFLEX COIL MODEL NUMBER EXPLANATION

R	C	B	A	-	24	57	G	G	14	A	I
1	2	3	4		5	6	7	8	9	10	11

Position

1 Tradename

2 Coil

3 Type of Coil
- B = Flowcheck Standard Cooling/ Heat Pump
- G = Expansion Valve (Cooling Only)
- H = Expansion Valve Heat Pump

4 Design Series

5 Nominal Capacity
- 24 = 18,000 to 24,000 BTUH
- 37 = 30,000 TO 36,000 BTUH
- 48 = 42,000 TO 48,000 BTUH
- 60 = 60000 BTUH

[A capacity is dependent upon metering device and system combination. See outdoor unit instructions for specifications.]

6 Metering Device
- ** = Flowcheck Piston orifice size

7 Connection [Refrigeration]
- G = Front

Position

8 Airflow

"G" Connection
- G = Upflow/Downflow
- H = Horizontal - Left
- Z = Horizontal - Right

9 Coil Casing
- 14 = 14"
- 17 = 17"
- 21 = 21"
- 24 = 24"

10 Filter/Adapter
- Blank = None
- A = Filter / Filter Rack
- B = Adapters [78 - 80% Furnace]
- X = If Unit Has Insulation

11 Variation
- I = Insulation

Air Flow Connection	Coil Code	14 / 15	17.5 / 18	21 / 22	24.5 / 26
F / H	A	NONE	NONE	NONE	NONE
F H	B				RCBA-6089GG24 RCBA-6089GH24
F H	C			RCBA-4882GG21 RCBA-4882GH21	
F H	D	RCBA-2457GG14 RCBA-2457GH14	RCBA-3765GG17 RCBA-3765GH17	RCBA-4876GG21 RCBA-4876GH21	
F H	E	RCGA-24A1GG14 RCGA-24A1GH14	RCGA-37A1GG17 RCGA-37A1GH17	RCGA-48A1GG21 RCGA-48A1GH21	RCGA-60A1GG24 RCGA-60A1GH24
F H	F	RCGA-24A2GG14 RCGA-24A2GH14	RCGA-36A2GG17 RCGA-36A2GH17		
F H	G	RCHA-24A1GG14 RCHA-24A1GH14	RCHA-36A1GG17 RCHA-36A1GH17	RCHA-48A1GG21 RCHA-48A1GH21	RCHA-60A1GG24 RCHA-60A1GH24
F H	H	RCHA-24A2GG14 RCHA-24A2GH14	RCHA-36A2GG17 RCHA-36A2GH17	RCBA-4873GG21 RCBA-4873GH21	

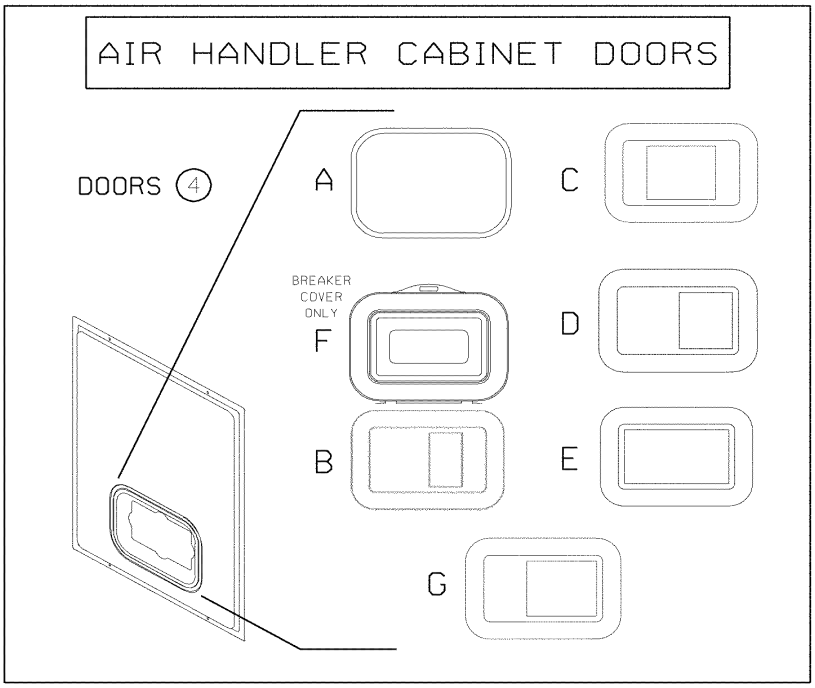
AIR HANDLER CABINET DOORS
DOORS 4
A
C
BREAKER
COVER
ONLY
F
D
B
E
G

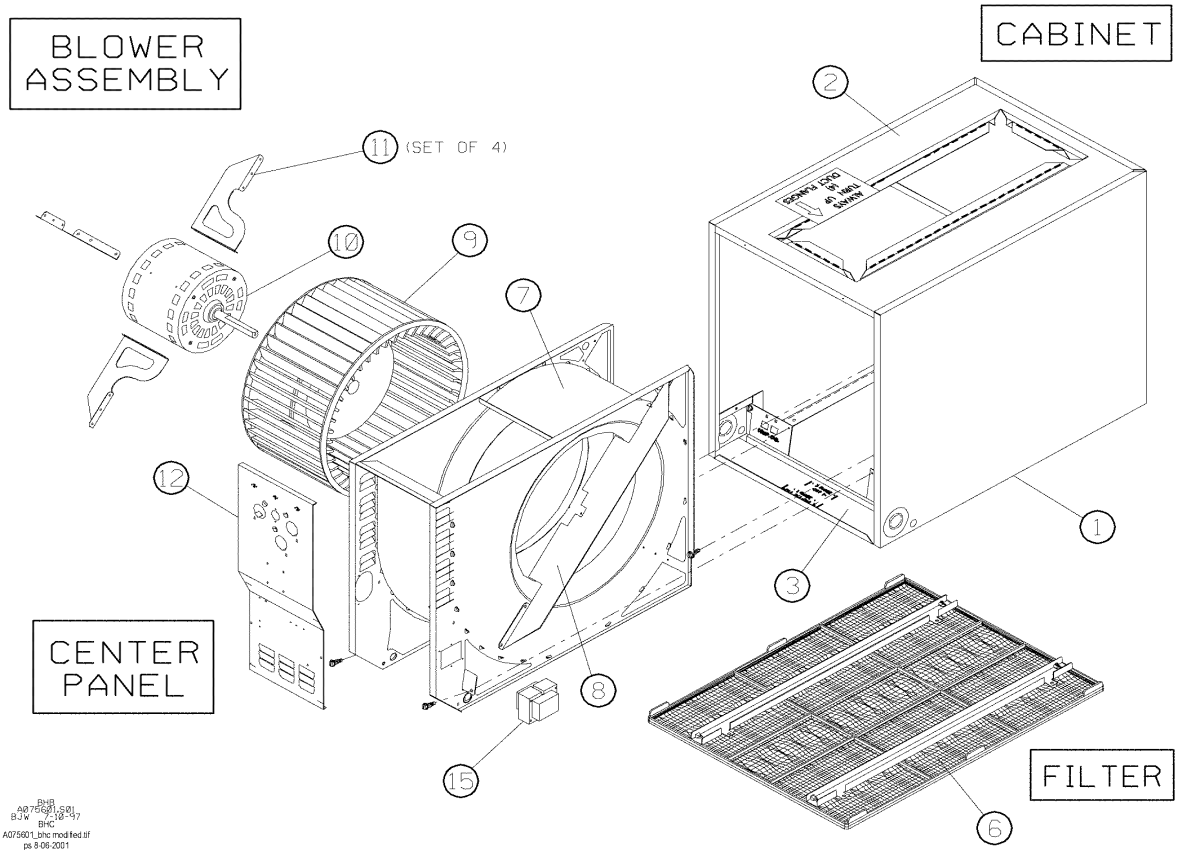
BLOWER
ASSEMBLY
CABINET
11 (SET OF 4)
10
9
7
2
12
1
3
CENTER
PANEL
8
15
FILTER
6
BHB
A075601_S01
BJW 7-10-97
BHC
A075601_bhc modified.tif
ps 8-06-2001

Electrical Components

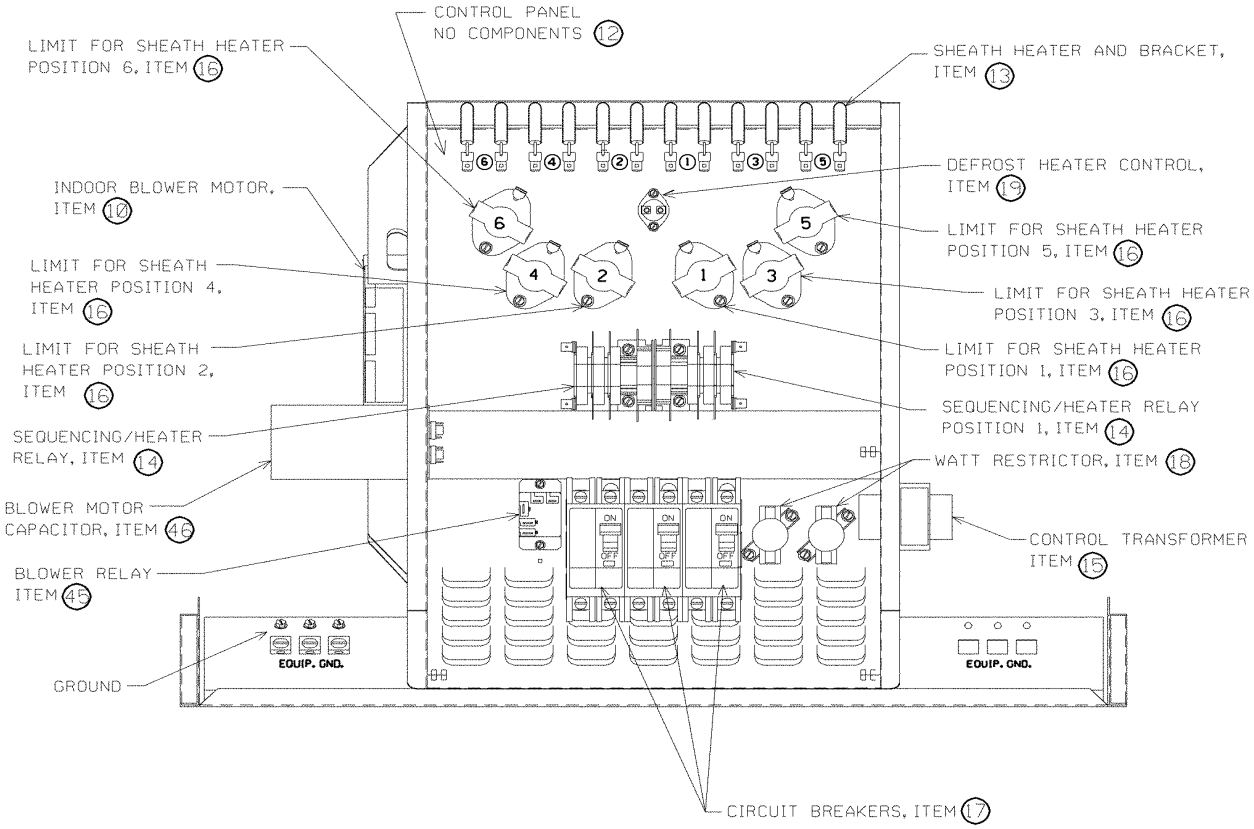

NOTE:
HEATER ELEMENT IN POSITION "1" IS ASSOCIATED WITH THE LIMIT CONTROL IN POSITION "1", HEATER ELEMENT "2" WITH LIMIT CONTROL "2", ETC.

BHB
A075701LS01
BJW 6-4-97

NO.	MODEL CABINET WIDTH	NOTE	[-] BHC 14 / 15	[-] BHC 17 / 18	[-] BHC 21 / 22	[-] BHC 24 / 26	

Order Quantity is in ( ) / "?" In Place of any character

PANELS & SHEET METAL PARTS

1	Jacket		AS-58397-01	AS-58397-02	AS-58397-03	AS-58397-04	
2	Blower Shelf-Cover / Top Deck						
	CABINET WIDTH						
	14, 17, 21, 24		AS-58389-01	AS-58389-02	AS-58389-03	AS-58389-04	
	15, 18, 22, 26		AS-59452-01	AS-59452-02	AS-59452-03	AS-59452-04	
3	Bottom Channel		AE-58381-01	AE-58381-02	AE-58381-03	AE-58381-04	
4	Blower Door Panel		**Door Panel Number (See drawing to locate the correct type of opening)**				
4A	Solid - No opening		AE-59439-05 14???N, 15J13S	AE-59440-05 17???N, 18J20S	AE-59441-05 21???N, 22J25S	AE-59442-05 24???N, 26J25S	
4B	Single Breaker - Small Opening Right Side		AE-59439-06 14???S	AE-59440-06 17J06S, 17J07S, 17J11S, 17T07S, 17T11S	AE-59441-06 21J06S, 21J07S, 21J11S, 21T07S, 21T11S	AE-59442-06 24J11S, 24T07S, 24T11S	
4C	Double Breaker - Center Opening		dna	AE-59440-07 17C11S, 17C14S, 17J14S, 17T14S	dna	dna	
4D	Three Phase Breaker - Middle to Right Side Opening		dna	AE-59440-08 17C08C	AE-59441-08 21C08S, 21C11S, 21C14S, 21C18M, 21D09N	AE-59442-08 24C11S, 24C14S	
4E	Triple Single Breaker - Full Opening		dna	dna	dna	AE-59442-09 24C18M, 24C21M	
4G	Double Breaker - Before Middle/Side Opening		dna	dna	AE-59441-07 21J14S, 21J18S, 21T18M, 21T18S	AE-59442-07 24J14S, 24J18S, 24J21S, 24T18M, 24T21M, 24T14S, 24T18S, 24T21S	
4F	Breaker Cover		AE-59379-02	AE-59379-02	AE-59379-02	AE-59379-02	
6	Filter - Plastic		AE-59375-01	AE-59375-02	AE-59375-03	AE-59375-04	
7	Blower Housing						
	Electric Heat Designation						
	00		AS-58391-01	AS-58391-05	AS-58391-10	AS-58391-16	
	06		AS-58391-23	AS-58391-24	AS-58391-25	dna	
	07		AS-58391-03	AS-58391-07	AS-58391-12	AS-58391-18	
	08		dna	AS-58391-08	AS-58391-13	AS-58391-19	
	09		dna	dna	AS-58391-12	AS-58391-19	
	11		AS-58391-04	AS-58391-08	AS-58391-13	AS-58391-19	
	13		AS-58391-01	dna	dna	dna	
	14		dna	AS-58391-08	AS-58391-14	AS-58391-20	
	15		dna	dna	dna	AS-58391-22	
	16		dna	dna	AS-58391-15	AS-58391-22	
	18		dna	dna	AS-58391-15	AS-58391-21	
	20		dna	AS-58391-05	dna	dna	
	21		dna	dna	dna	AS-58391-22	
	25		dna	dna	AS-58391-10	dna	
8	Air Straightener		AE-58392-02	AE-58392-02	AE-58392-02	AE-58392-02	
9	Blower Wheel		70-23111-50	70-23111-51	70-23111-43	70-23111-44	
np	Front Coil Support		AE-58348-07	AE-58348-08	AE-58348-09	AE-58348-10	
np	Front Coil Support		AE-58348-01	AE-58348-02	AE-58348-03	AE-58348-04	
np	Rear Coil Support		AE-58349-07	AE-58349-08	AE-58349-09	AE-58349-10	
np	Rear Coil Support		AE-58349-01	AE-58349-02	AE-58349-03	AE-58349-04	
np	Bottom Rear Support		AE-58349-05	AE-58349-05	AE-58349-06	AE-58349-06	

NO.	MODEL CABINET WIDTH	NOTE	[-] BHC 14 / 15	[-] BHC 17 / 18	[-] BHC 21 / 22	[-] BHC 24 / 26	

Order Quantity is in ( ) / "?" In Place of any character

Blower Motor and Capacitor

10	Blower Motor		Model Sizes	Model Sizes	Model Sizes	Model Sizes	
	51-27210-01 - 1/6HP, 115V, 2 Spd, 60 HZ		14A00N				
	51-27210-02 - 1/4HP, 115V, 2 Spd, 60 HZ			17A00N			
	51-27210-03 - 1/3HP, 115V, 2 Spd, 60 HZ				21A00N		
	51-27210-04 - 1/2HP, 115V, 1 Spd, 60 HZ					24A00N	
	51-27211-01 - 1/6HP, 208-230V, 2 Spd, 60/50 HZ		14??? Except 14A00N 15T13S	dna	dna	dna	
	51-27211-02 - 1/4HP, 208-230V, 2 Spd, 60/50 HZ		dna	17??? Except 17A00N 18J20S	dna	dna	
	51-27211-03 - 1/3HP, 208-230V, 2 Spd, 60/50 HZ		dna	dna	21C??? 21J??? 21T??? 22C18M	dna	
	51-27211-04 - 1/2HP, 208-230V, 2 Spd, 60/50 HZ		dna	dna	dna	24C??? 24J??? 24T??? 26T25S	
	51-27212-01 - 1/3HP, 460V, 2 Spd, 60 HZ		dna	dna	21D00N	dna	
	51-27212-02 - 1/2HP, 460V, 2 Spd, 60/50 HZ		dna	dna	dna	24D??N	
	51-23101-15 - 1/2HP, 380-415V, 2 Spd, 50 HZ		dna	dna	21N??N	dna	
	51-23102-16 - 1/2HP, 200-230V, 1 Spd 60/50 HZ		dna	dna	dna	24N??N	
11	Motor Mounting Bracket Kit		AE-58384-81	AE-58384-81	AE-58384-81	AE-58384-81	
46	Blower Motor Capacitor						
	43-20847-09 - 10/ 370 MFD/Volts		14A00N	17??? Except 17A00N 18J20S	dna	24N??N Except 24N00N	
	43-20847-10 - 7.5/ 370 MFD/Volts		14??? Except 14A00N 15T13S	dna	21N??N	dna	
	43-20847-17 - 15/ 370 MFD/Volts		dna	17A00N	21C??? 21D00N 21J??? 21T??? 22C18M	dna	
	43-20847-41 - 15/ 370 MFD/Volts		dna	dna	dna	24N00N	
	43-20847-42 - 20/ 370 MFD/Volts		dna	dna	21A00N	24A00N 24D??N	
	43-20847-47 - 25/ 370 MFD/Volts		dna	dna	dna	24C??? 24J??? 24T??? 26T25S	

NO.	MODEL CABINET WIDTH	NOTE	[-] BHC 14 / 15	[-] BHC 17 / 18	[-] BHC 21 / 22	[-] BHC 24 / 26	

Order Quantity is in ( ) / "?" In Place of any character

Center Panel, Transformer, Blower Relay

12	Center Panel - Select By Model						
	[-]BHC-		**AE-58385-02** 14???N, 15J13S	**AE-58385-07** 17???N, 18J20S	**AE-58385-14** 21???N 22J25S	**AE-58385-24** 24???N 26J26S	
	[-]BHC-		**AE-58385-04** 14???S	**AE-58385-11** 17C??S	**AE-58385-16** 21?06S, 21?07S, 21?11S, 21C14S, 21T18M	**AE-58385-28** 24C11S, 24C14S	
	[-]BHC-		dna	**AE-58385-08** 17J06S, 17J07S, 17T07S	**AE-58385-21** 21C18M	**AE-58385-27** 24C18M, 24C21M	
	[-]BHC-		dna	**AE-58385-09** 17J11S, 17J14S, 17T11S, 17T14S	**AE-58385-18** 21J14S, 21J19S, 21T18S	**AE-58385-25** 24J11S, 24T07S, 24T11S	
	[-]BHC-		dna	dna	dna	**AE-58385-26** 24J14S, 24J18S, 24J21S, 24T18M, 24T21M, 24T14S, 24T18S, 24T21S	
15	Transformer -						
	[-]BHC-???00N - see specific models listed to the right.		46-23115-01 14A00N	46-23115-01 17A00N, 17J00N, 17T00N	46-23115-01 21A00N, 21J00N	46-23115-01 24A00N	
	[-]BHC-??D??N - see specific models listed to the right.		dna	dna	46-23115-03 21D09N	46-23115-03 24D00N, 24D09N, 24D16N	
	[-]BHC-??N??N - see specific models listed to the right.		dna	dna	46-23115-05 21N00N, 21N08N	46-23115-05 24N00N, 24N06N, 24N11N, 24N15N, 24N21N	
	All Other Models Not listed Above		46-23115-02	46-23115-02	46-23115-02	46-23115-02	
45	Blower Relay						
	[-]BHC-?????N - see specific models listed to the right.		dna	dna	42-23114-02 21N00N, 21D09N, 21N08N	42-23114-02 24D00N, 24N00N, 24D09N, 24D16N, 24N08N, 24N11N, 24N15N, 24N21N	
	All Other Models Not listed Above		42-21571-01	42-21571-01	42-21571-01	42-21571-01	

NO.	MODEL CABINET WIDTH	NOTE	[-] BHC 14 / 15	[-] BHC 17 / 18	[-] BHC 21 / 22	[-] BHC 24 / 26	

Order Quantity is in ( ) / "?" In Place of any character

ELECTRIC ELEMENTS AND LIMIT CONTROL

13	Sheath Heater and Bracket Voltage / Electric Heat Designation						
	?00		dna	dna	dna	dna	
	?06	cr	AS-58386-91(2)	AS-58386-91(2)	AS-58386-91(2)	dna	
	?07		AS-58386-92 (2)	AS-58386-92 (2)	AS-58386-92 (2)	AS-58386-92 (2)	
	?08		dna	AS-58386-91(3)	AS-58386-91(3)	AS-58386-91(3)	
	?09		dna	dna	AS-58386-91(3)	AS-58386-91(3)	
	?11		AS-58386-92 (3)	AS-58386-92 (3)	AS-58386-92 (3)	AS-58386-92 (3)	
	?13		44-42733-01	dna	dna	dna	
	C14 / J14		dna	AS-58386-92 (3)	AS-58386-92 (4)	AS-58386-92 (3)	
	T14		dna	AS-58386-92 (4)	dna	dna	
	?15		dna	dna	dna	AS-58386-91(6)	
	?16		dna	dna	AS-58386-92 (5)	AS-58386-91(6)	
	?18		dna	dna	AS-58386-92 (5)	AS-58386-92(4) AS-58386-91(1)	
	?20		dna	44-42733-02	dna	dna	
	C21		dna	dna	dna	AS-58386-92 (7)	
	J21 / N21 / T21		dna	dna	dna	AS-58386-92 (6)	
	?25		dna	dna	44-42733-03	44-42733-04	
16	Limit for Sheath Heater - Voltage / Electric Heat Designation	**Listed in position order - See drawing.**					
	?00		dna	dna	dna	dna	
	?06		47-23113-02	47-23113-03	47-23113-02	dna	
	?07		47-23113-01 47-23113-02	47-23113-03 47-23113-02	47-23113-01 47-23113-05	47-23113-01 47-23113-02	
	C08		dna	47-23113-03 47-23113-02 47-23113-04	47-23113-01 47-23113-05 47-23113-05	dna	
	N08		dna	dna	47-23113-10 47-23113-10 47-23113-10	47-23113-10 47-23113-08 47-23113-10	
	?09		dna	dna	47-23113-10 47-23113-10 47-23113-10	47-23113-10 47-23113-08 47-23113-10	
	C11		dna	47-23113-03 47-23113-02 47-23113-04	47-23113-01 47-23113-05 47-23113-05	47-23113-01 47-23113-02 47-23113-05	
	J11 / T11		47-23113-01 47-23113-02 47-23113-02	47-23113-03 47-23113-02 47-23113-04	47-23113-01 47-23113-05 47-23113-05	47-23113-01 47-23113-02 47-23113-05	
	N11		dna	dna	47-23113-07 47-23113-10 47-23113-10	47-23113-07 47-23113-08 47-23113-10	
	C14		dna	47-23113-03 47-23113-02 47-23113-04	47-23113-01 47-23113-05 47-23113-05 47-23113-04	47-23113-01 47-23113-02 47-23113-05	
	J14		dna	47-23113-03 47-23113-02 47-23113-04	47-23113-01 47-23113-05 47-23113-05 47-23113-04	47-23113-01 47-23113-02 47-23113-05	

NO.	MODEL CABINET WIDTH	NOTE	[-] BHC 14 / 15	[-] BHC 17 / 18	[-] BHC 21 / 22	[-] BHC 24 / 26	

Order Quantity is in ( ) / "?" In Place of any character

ELECTRIC ELEMENT AND LIMIT CONTROL - CONTINUED

16	Limit for Sheath Heater - Voltage / Electric Heat Designation	**Listed in position order - See drawing.**					
	?16		dna	dna	47-23113-07 47-23113-10 47-23113-09	47-23113-07 47-23113-08 47-23113-10 47-23113-08	
	C18		dna	dna	47-23113-01 47-23113-05 47-23113-05 47-23113-04 47-23113-04	47-23113-01 47-23113-02 47-23113-05 47-23113-06	
	J18		dna	dna	47-23113-01 47-23113-05 47-23113-05 47-23113-04	47-23113-01 47-23113-02 47-23113-05 47-23113-06	
	T18M		dna	dna	47-23113-01 47-23113-05 47-23113-05 47-23113-04 47-23113-04	47-23113-01 47-23113-02 47-23113-05 47-23113-05 47-23113-06	
	T18S		dna	dna	47-23113-01 47-23113-05 47-23113-05 47-23113-04	47-23113-01 47-23113-02 47-23113-05 47-23113-06	
	?20		dna	????	dna	dna	
	C21		dna	dna	dna	47-23113-01 47-23113-01 47-23113-02 47-23113-05 47-23113-05 47-23113-06 47-23113-06	
	J21		dna	dna	dna	47-23113-01 47-23113-02 47-23113-05 47-23113-06	
	N21		dna	dna	dna	47-23113-07 47-23113-08 47-23113-10 47-23113-11	
	T21		dna	dna	dna	47-23113-01 47-23113-02 47-23113-05 47-23113-06	
	?25		dna	dna	44-42733-03	44-42733-04	

NO.	MODEL CABINET WIDTH	NOTE	[-] BHC 14 / 15	[-] BHC 17 / 18	[-] BHC 21 / 22	[-] BHC 24 / 26	

Order Quantity is in ( ) / "?" In Place of any character

ELECTRIC ELEMENT AND LIMIT CONTROL - CONTINUED

16	Limit for Sheath Heater - Voltage / Electric Heat Designation	**Listed in position order - See drawing.**					
	?16		dna	dna	47-23113-07 47-23113-10 47-23113-09	47-23113-07 47-23113-08 47-23113-10 47-23113-08	
	C18		dna	dna	47-23113-01 47-23113-05 47-23113-05 47-23113-04 47-23113-04	47-23113-01 47-23113-02 47-23113-05 47-23113-06	
	J18		dna	dna	47-23113-01 47-23113-05 47-23113-05 47-23113-04	47-23113-01 47-23113-02 47-23113-05 47-23113-06	
	T18M		dna	dna	47-23113-01 47-23113-05 47-23113-05 47-23113-04 47-23113-04	47-23113-01 47-23113-02 47-23113-05 47-23113-05 47-23113-06	
	T18S		dna	dna	47-23113-01 47-23113-05 47-23113-05 47-23113-04	47-23113-01 47-23113-02 47-23113-05 47-23113-06	
	C21		dna	dna	dna	47-23113-01 47-23113-01 47-23113-02 47-23113-05 47-23113-05 47-23113-06 47-23113-06	
	J21		dna	dna	dna	47-23113-01 47-23113-02 47-23113-05 47-23113-06	
	N21		dna	dna	dna	47-23113-07 47-23113-08 47-23113-10 47-23113-11	
	T21		dna	dna	dna	47-23113-01 47-23113-02 47-23113-05 47-23113-06	
	?25		dna	dna	44-42733-03	44-42733-04	

NO.	MODEL CABINET WIDTH	NOTE	[-] BHC 14 / 15	[-] BHC 17 / 18	[-] BHC 21 / 22	[-] BHC 24 / 26	

Order Quantity is in ( ) / "?" In Place of any character

ELECTRICAL PARTS

np	Finger Stop Voltage / Electric Heat Designation						
	?00		dna	dna	dna	dna	
	?06S		45-23203-01 (2)	45-23203-01 (1)	45-23203-01 (2)	dna	
	?07S		45-23203-01 (2)	45-23203-01 (1)	45-23203-01 (2)	45-23203-01 (2)	
	?08S		dna	45-23203-01 (3)	45-23203-01 (3)	dna	
	C11S		45-23203-01 (2)	45-23203-01 (3)	45-23203-01 (3)	45-23203-01 (2)	
	J11S		dna	45-23203-01 (1)	45-23203-01 (2)	45-23203-01 (2)	
	T11S		45-23203-01 (2)	45-23203-01 (1)	45-23203-01 (2)	45-23203-01 (2)	
	C14S		dna	45-23203-01 (3)	45-23203-01 (3)	45-23203-01 (2)	
	J14S		dna	dna	45-23203-01 (2)	dna	
	C18M		dna	dna	45-23203-01 (3)	45-23203-01 (6)	
	T18M		dna	dna	dna	45-23203-01 (4)	
	C21M		dna	dna	dna	45-23203-01 (2)	
	T21M		dna	dna	dna	45-23203-01 (4)	
np	Jumper Bar 4 - pole Electric Heat Designation						
	14		dna	45-23202-01 (1)	dna	45-23202-01 (1)	
	18		dna	dna	45-23202-01 (1)	45-23202-01 (1)	
	21		dna	dna	dna	45-23202-01 (1)	
18	Watt Restrictors		**For Heat Pump Addition**				
	47-23117-01		14J07N, 14J07S, 14T07N, 14T07S, 14J11N, 14J11S, 14T11N, 14T11S	17J14S	21N16N	dna	
	47-23117-02		dna	dna	21C14N, 21C08S, 21C11S, 21J18S, 21T18S, 21T18M, 21C14N	24C14S, 24C18M, 24C21M, 24J14S, 24J18S, 24J21S, 24T18M, 24T21M, 24T14S, 24T18S, 24T21S	
	47-23117-03		dna	dna	dna	24D16N, 24N15N, 24N21N	
19	Defrost Heater Control		47-23118-01	47-23118-01	47-23118-01	47-23118-01	

NO.	MODEL CABINET WIDTH	NOTE	[-] BHC 14 / 15	[-] BHC 17 / 18	[-] BHC 21 / 22	[-] BHC 24 / 26	

Order Quantity is in ( ) / "?" In Place of any character

ELECTRICAL PARTS

np	Terminal Block						
	No Terminal Block		No Terminal Blk 14J06S, 14J07S, 14J11S, 14T07S, 14T11S	No Terminal Blk 17C08S, 17C11S, 17C14S, 17J06S, 17J07S, 17J11S, 17J14S, 17T07S, 17T11S, 17T14S	No Terminal Blk 21C08S, 21C11S, 21C14S, 21C18M, 21J06S, 21J07S, 21J11S, 21J14S, 21J18S, 21T07S, 21T11S, 21T18S, 21T18M	No Terminal Blk 24C11S, 24C11S, 24D00N, 24T00N, 24J00N, 24N00N, 24J11S, 24T07S, 24T11S, 24T14S, 24T18S, 24521S, 26J25S	
	45-23222-01		14A00N, 14J00N, 14TOON, 14T07N, 14T11N, 15J13S	17A00N, 17J00N, 17J06N, 17T00N, 18J20S	dna	dna	
	45-23222-02		dna	17J07N, 17J11N	21A00N, 21D09N, 21J00N, 21J06N, 21J07N, 21J11N, 21N00N, 21T00N, 21T07N, 21T11N, 22J25S	24A00N, 24J11N, 24T07N, 24T11N	
	45-23222-03		dna	17C11N, 17C14N	21C11N, 21C14N, 21N08N, 21N11N, 21N16N	24C11N, 24C14N, 24D09N, 24D16N, 24N08N, 24N11N, 24N15N, 24N21N	
17	Circuit Breaker Electric Heat Designation						
	00		dna	dna	dna	dna	
	06		42-23201-01	42-23201-01	42-23201-01	dna	
	07		42-23201-01	42-23201-01	42-23201-01	42-23201-01	
	11		42-23201-01	42-23201-01	42-23201-01	42-23201-01	
	14		dna	42-23201-01 (2)	42-23201-01	42-23201-01 (2)	
	18		dna	dna	42-23201-01 (2)	42-23201-01 (2)	
	21		dna	dna	dna	42-23201-01 (2)	

NO.	MODEL CABINET WIDTH	NOTE	[-] BHC 14 / 15	[-] BHC 17 / 18	[-] BHC 21 / 22	[-] BHC 24 / 26	

Order Quantity is in ( ) / "?" In Place of any character

ELECTRICAL PARTS

14	Sequencing / Heat Relay - Electric Heat Designation		**Listed in position order - See drawing.**				
	00		dna	dna	dna	dna	
	06		42-23116-06	42-23116-06	42-23116-06	dna	
	07		42-23116-07	42-23116-07	42-23116-07	42-23116-07	
	08		dna	42-23116-06 42-23116-08	42-23116-06 42-23116-08	42-23116-06 42-23116-08	
	09		dna	dna	dna	42-23116-06 42-23116-08	
	11		42-23116-06 42-23116-08	42-23116-06 42-23116-08	42-23116-06 42-23116-08	42-23116-06 42-23116-08	
	14		dna	42-23116-07 42-23116-08	42-23116-07 42-23116-08	42-23116-07 42-23116-08	
	15		dna	dna	dna	42-23116-07 42-23116-09	
	16		dna	dna	42-23116-06 42-23116-09	42-23116-07 42-23116-09	
	18		dna	dna	42-23116-07 42-23116-09	42-23116-07 42-23116-09	
	21		dna	dna	dna	42-23116-07 42-23116-09	

Air Conditioning Division
3900 South Zero Street
Fort Smith, Arkansas 72908
501.648.4786

Printed in U.S.A 8/2001 CM Form Number 92-24326-13-00