RKNL-B

Parts List
17-August-2022

This parts list is current as of the above revision date.
See http://www.rheempartslists.net/92-42800-RKNL-B.pdf for the current revision.

Package Gas-Electric - Commercial

Table of Contents

Model Explanation ..... Page 3

Parts Numbers

Panels - Miscellaneous (Granite-Steel Gray) 072-151 (1) ..... Page 4
Panels - Miscellaneous (Granite-Steel Gray) 072-151 (2) ..... Page 5
Panels - Miscellaneous (Granite-Steel Gray) 072-151 (3) ..... Page 6
Panels - Miscellaneous (Granite-Steel Gray) 180-300 (1) ..... Page 7
Panels - Miscellaneous (Granite-Steel Gray) 180-300 (2) ..... Page 8
Panels - Miscellaneous (Neutra Green) 072-151 (1) ..... Page 9
Panels - Miscellaneous (Neutra Green) 072-151 (2) ..... Page 10
Panels - Miscellaneous (Neutra Green) 072-151 (3) ..... Page 11
Panels - Miscellaneous (Neutra Green) 180-300 (1) ..... Page 12
Panels - Miscellaneous (Neutra Green) 180-300 (2) ..... Page 13
Electrical Group 072-151 (1) ..... Page 14
Electrical Group 072-151 (2) ..... Page 15
Electrical Group 072-151 (3) ..... Page 16
Electrical Group 180-300 (1) ..... Page 17
Electrical Group 180-300 (2) ..... Page 18
Fan Group 072-151 (1) ..... Page 19
Fan Group 072-151 (2) ..... Page 20
Fan Group 180-300 ..... Page 21
Blower Group 072-151 (1) ..... Page 22
Blower Group 072-151 (2) ..... Page 23
Blower Group 180-300 ..... Page 24
Coil Parts 072-090 (1) ..... Page 25
Coil Parts 102-151 (2) ..... Page 26
Coil Parts 180-300 Gray ..... Page 27
Coil Parts 180-300 Green ..... Page 28
Compressor Group 072-151 (1) ..... Page 29
Compressor Group 072-151 (2) ..... Page 30
Compressor Group 180-300 ..... Page 31
Heat Exchanger-Burner Group 072-085 (1) ..... Page 32
Heat Exchanger-Burner Group 072-085 (2) ..... Page 33
Heat Exchanger-Burner Group 090-150 (1) ..... Page 34
Heat Exchanger-Burner Group 090-150 (2) ..... Page 35
Heat Exchanger-Burner Group 151 ..... Page 36
Heat Exchanger-Burner Group 180 ..... Page 37
Heat Exchanger-Burner Group 210 ..... Page 38
Heat Exchanger-Burner Group 240 ..... Page 39
Heat Exchanger-Burner Group 241 ..... Page 40
Heat Exchanger-Burner Group 300 ..... Page 41
Gas Controls ..... Page 42
Accessories (1) ..... Page 43
Accessories (2) ..... Page 44
Orifice Selection Chart ..... Page 45

Drawings/Photographs

Exploded View 072-151 ..... Page 46
Exterior - Front 072-151 ..... Page 47
Exterior - Back 072-151 ..... Page 47
Filter-Coil Assembly 072-151 ..... Page 48
Condenser Coil Assembly 072-151 ..... Page 48
Heat Exchanger Assembly 072-151 ..... Page 49
Front Panel Brackets 072-151 ..... Page 49
Filter Frame Assembly 072-151 ..... Page 50
Blower Assembly 072-151 ..... Page 50
Control Box 072-151 ..... Page 51
Low Voltage Shields 072-151 ..... Page 52
Exterior - Front 180-300 ..... Page 53
Exterior - Rear 180-300 ..... Page 53
Fan Location 180-300 ..... Page 54
Base Pan Assembly 180-300 ..... Page 55
Base Rail Assembly 180-300 ..... Page 55
Front Panel Brackets 180-300 ..... Page 56
Interior - Coil 180-300 ..... Page 56
Heat Compartment 180-300 ..... Page 57
Condenser Bulkhead 180-300 ..... Page 57
Filter Frame - Low Voltage Shields 180-300 ..... Page 58
Burner Assembly 180-300 ..... Page 59
Control Box 180-300 ..... Page 60
Blower Assembly 180-300 ..... Page 61

Notes/Disclaimer ..... Page 62

MODEL NUMBER EXPLANATION

R	K	N	L	-	B	0	9	0	C	L	1	5	E	A	A	C
1	2	3	4		5	6			7	8	9		10	11		12

1 TRADE NAME

2 K = PACKAGE GAS / ELECTRIC
Commercial

3 EFFICIENCY DESIGNATION
N = High Efficiency

4 DESIGN SERIES
L = R-410A

5 TECHNICAL VARIATION

6 COOLING CAPACITY (BTU/HR)
072/073 = 72,000
085 = 85,000
090 = 90,000
102 = 102,000
120 = 120,000
150 = 150,000
151 = 150,000
180 = 180,000
210 = 210,000
240/241 = 240,000
300 = 300,000

7 ELECTRICAL DESIGNATION
C = 208-230/3/60
D = 460/3/50
Y = 575/3/60

8 DRIVE PACKAGE
L = Belt Drive
M = Belt Drive - High Static
N = Belt Drive (085, 090)

9 HEATING CAPACITY (MBH)
15 = 150,000
22 = 220,000
25 = 250,000
30 = 300,000
40 = 400,000

10 IGNITION SYSTEM (E = Electric Start)

11 OPTION CODES
AA = No Options
AD = Hail Guard
AJ = Stainless Steel Heat Exchanger
BG = Hail Guard and Stainless Steel Heat Exchanger

12 ECONOMIZER OPTIONS
A = No Economizer
B = Single Enthalpy Economizer with Barometric Relief
C = Single Enthalpy Economizer with Barometric Relief and Smoke Detector

SERIAL NUMBER EXPLANATION (Units Produced before Nov. 2013)

2	M	A	1	2	3	4	A	D	A	A	F	0	5	0	9	0	0	0	1
(1)		(2)	(3)				(4)	(5)	(6)	(7)	(8)	(9)		(10)		(11)			

(1) GAS CODE

(2) BLOWER CONTROL BOARD

(3) COMPRESSOR IDENTIFICATION NUMBER

(4) IGNITION DEVICE

(5) INDUCER BLOWER

(6) HEAT EXCHANGER

(7) TECHNOLOGY VARIATIONS

(8) PLANT
F = Fort Smith, AR

(9) WEEK

(10) YEAR

(11) PRODUCTION NUMBER

SERIAL NUMBER EXPLANATION (Units Produced after Nov. 2013)

F	0	8	1	3	9	9	9	9
(1)	(2)		(3)		(4)			

(1) PLANT CODE

(2) WEEK (DATE CODE)

(3) YEAR

(4) PRODUCTION NUMBER

Note: For Compressor Identification Number, see Compressor Code on Rating Plate
For Gas Code, see Control System Gas Code on Rating Plate

No.	Notes	MODEL TECHNICAL VARIATION COOLING CAPACITY	RKNL- B 072	RKNL- B 073	RKNL- B 090	RKNL- B 102	RKNL- B 120
		PANELS - RAILS, BASE PANS, INSIDE CABINET (Granite/Steel Gray, After F4411)					
		BASE RAILS:					
A		Base Rail - Front	AE-90575-15	AE-90575-15	AE-90575-15	AE-90575-15	AE-90575-15
B		Base Rail - Right	AE-90576-03	AE-90576-03	AE-90576-03	AE-90576-03	AE-90576-03
C		Base Rail - Rear	AE-90575-04	AE-90575-04	AE-90575-04	AE-90575-04	AE-90575-04
D		Base Rail - Left	AE-90576-04	AE-90576-04	AE-90576-04	AE-90576-04	AE-90576-04
		BASE PANS:					
E		Outdoor Coil Base Pan	AS-90583-03H	AS-90583-03H	AS-90583-05H	AS-90583-05H	AS-90583-05H
F		Indoor Coil Base Pan	AS-90577-12	AS-90577-12	AS-90577-12	AS-90577-12	AS-90577-12
		INSIDE CABINET:					
G		Entry Plate	AE-90614-01	AE-90614-01	AE-90614-01	AE-90614-01	AE-90614-01
H		Entry Plate	AE-90614-01	AE-90614-01	AE-90614-01	AE-90614-01	AE-90614-01
J		Heat Compartment Side	AE-90598-07	AE-90598-07	AE-90598-07	AE-90598-07	AE-90598-07
K		Blower Deck	AS-90592-09	AS-90592-09	AS-90592-10	AS-90592-10	AS-90592-10
L		Wireway	AE-90718-05	AE-90718-05	AE-90718-05	AE-90718-05	AE-90718-05
M		Condenser Bulkhead	AS-90592-09	AS-90592-09	AS-90609-15	AS-90609-15	AS-90609-15

No.	Notes	MODEL TECHNICAL VARIATION COOLING CAPACITY	RKNL- B 072	RKNL- B 073	RKNL- B 090	RKNL- B 102	RKNL- B 120
		PANELS - FRONT (Granite/Steel Gray, After F4411)					
1		Control Box Door Assembly - w/Hinges, Latch, Gasket, Insulation	AS-102872-14H	AS-102872-14H	AS-102872-14H	AS-102872-14H	AS-102872-14H
2a		Bracket - Top Panel (Left)	AS-102859-16H	AS-102859-16H	AS-102859-16H	AS-102859-16H	AS-102859-16H
2b		Bracket - Top Panel (Center)	AS-102859-15H	AS-102859-15H	AS-102859-15H	AS-102859-15H	AS-102859-15H
2c		Post - Blower Section	AS-102682-12H	AS-102682-12H	AS-102682-12H	AS-102682-12H	AS-102682-12H
3a		Bracket - Bottom Panel (Left)	AS-102859-17H	AS-102859-17H	AS-102859-17H	AS-102859-17H	AS-102859-17H
3b		Bracket - Blower/Heater Compartment	AS-102859-14H	AS-102859-14H	AS-102859-14H	AS-102859-14H	AS-102859-14H
3c		Bracket - Bottom Panel (Right)	AS-102859-13H	AS-102859-13H	AS-102859-13H	AS-102859-13H	AS-102859-13H
		Latch Assembly - Control Box Door (2)	64-102855-01	64-102855-01	64-102855-01	64-102855-01	64-102855-01
4		Post Assembly - Indoor Coil Section	AS-90620-18H	AS-90620-18H	AS-90620-17H	AS-90620-17H	AS-90620-17H
5		Control Box Cover	AE-90713-02	AE-90713-02	AE-90713-02	AE-90713-02	AE-90713-02
6		Control Mounting Plate	AE-90712-06	AE-90712-06	AE-90712-06	AE-90712-06	AE-90712-06
7a		Low Voltage Shield (Before F3512) - Upper Straight	AE-90742-08	AE-90742-08	AE-90742-08	AE-90742-08	AE-90742-08
7a		Low Voltage Shield (After F3512) - Upper Angled	AE-90742-12	AE-90742-12	AE-90742-12	AE-90742-12	AE-90742-12
7b		Low Voltage Shield (Before F3512) - Lower	AE-90742-03	AE-90742-03	AE-90742-03	AE-90742-03	AE-90742-03
7b		Low Voltage Shield (After F3512) - Lower	AE-90742-11	AE-90742-11	AE-90742-11	AE-90742-11	AE-90742-11
7c		Low Voltage Shield - Middle Strip	AE-90742-09	AE-90742-09	AE-90742-09	AE-90742-09	AE-90742-09
8		Control Box Back Insulation Assembly	AS-90601-06	AS-90601-06	AS-90601-06	AS-90601-06	AS-90601-06
9		Mounting Bracket	AE-90779-02	AE-90779-02	AE-90779-02	AE-90779-02	AE-90779-02
		Outlet Flue Hood	AS-102966-01	AS-102966-01	AS-102966-01	AS-102966-01	AS-102966-01
	4	Inlet Flue Hood (2) - See Note 4	AE-90745-04	AE-90745-04	AE-90745-04	AE-90745-04	AE-90745-04
12	4	Gas Heat Access Panel Assembly - w/Hinges, Latch, Gasket, Insulation - See Note 4	AS-102872-20H	AS-102872-20H	AS-102872-20H	AS-102872-20H	AS-102872-20H
		Latch Assembly - Electric Heat Door (2)	64-102855-01	64-102855-01	64-102855-01	64-102855-01	64-102855-01
13		Gas Pipe Support Plate	AS-90774-10H	AS-90774-10H	AS-90774-10H	AS-90774-10H	AS-90774-10H
14		Blower Access Panel Assembly - w/Hinges, Latch, Gasket, Insulation	AS-102872-16H	AS-102872-16H	AS-102872-16H	AS-102872-16H	AS-102872-16H
		Latch Assembly - Blower Access Panel (3)	64-102855-01	64-102855-01	64-102855-01	64-102855-01	64-102855-01
15		High Pressure Guard (2)	AS-76160-01H	AS-76160-01H	AS-76160-01H	AS-76160-01H	AS-76160-01H
16		Heat Exchanger Mounting Frame Assembly	AS-90754-01	AS-90754-01	AS-90754-01	AS-90754-01	AS-90754-01
17		Condenser Coil Access Panel - Front	AS-90631-10H	AS-90631-10H	AS-90631-09H	AS-90631-09H	AS-90631-09H
18		Front Corner Post	AS-90701-06H	AS-90701-06H	AS-90701-06H	AS-90701-06H	AS-90701-06H

No.	Notes	MODEL TECHNICAL VARIATION COOLING CAPACITY	RKNL- B 151				
		PANELS - RAILS, BASE PANS, INSIDE CABINET (Granite/Steel Gray, After F4411)					
		BASE RAILS:					
A		Base Rail - Front	AE-90575-15				
B		Base Rail - Right	AE-90576-03				
C		Base Rail - Rear	AE-90575-04				
D		Base Rail - Left	AE-90576-04				
		BASE PANS:					
E		Outdoor Coil Base Pan	AS-90577-14A				
F		Indoor Coil Base Pan	AS-90577-12				
		INSIDE CABINET:					
G		Entry Plate	AE-90614-01				
H		Entry Plate	AE-90614-01				
J		Heat Compartment Side	AE-90598-07				
K		Blower Deck	AS-90592-10				
L		Wireway	AE-90718-05				
M		Condenser Bulkhead	AS-90609-19				

No.	Notes	MODEL TECHNICAL VARIATION COOLING CAPACITY	RKNL- B 151				
		PANELS - FRONT (Granite/Steel Gray, After F4411)					
1		Control Box Door Assembly - w/Hinges, Latch, Gasket, Insulation	AS-102872-14H				
2a		Bracket - Top Panel (Left)	AS-102859-16H				
2b		Bracket - Top Panel (Center)	AS-102859-15H				
2c		Post - Blower Section	AS-102682-12H				
3a		Bracket - Bottom Panel (Left)	AS-102859-17H				
3b		Bracket - Blower/Heater Compartment	AS-102859-14H				
3c		Bracket - Bottom Panel (Right)	AS-102859-13H				
		Latch Assembly - Control Box Door (2)	64-102855-01				
4		Post Assembly - Indoor Coil Section	AS-90620-24H				
5		Control Box Cover	AE-90713-02				
6		Control Mounting Plate	AE-90712-06				
7a		Low Voltage Shield (Before F3512) - Upper Straight	AE-90742-08				
7a		Low Voltage Shield (After F3512) - Upper Angled	AE-90742-12				
7b		Low Voltage Shield (Before F3512) - Lower	AE-90742-03				
7b		Low Voltage Shield (After F3512) - Lower	AE-90742-11				
7c		Low Voltage Shield - Middle Strip	AE-90742-09				
8		Control Box Back Insulation Assembly	AS-90601-06				
9		Mounting Bracket	AE-90779-02				
		Outlet Flue Hood	AS-102966-01				
	4	Inlet Flue Hood (2) - See Note 4	AE-90745-04				
12	4	Gas Heat Access Panel Assembly - w/Hinges, Latch, Gasket, Insulation - See Note 4	AS-102872-20H				
		Latch Assembly - Electric Heat Door (2)	64-102855-01				
13		Gas Pipe Support Plate	AS-90774-10H				
14		Blower Access Panel Assembly - w/Hinges, Latch, Gasket, Insulation	AS-102872-16H				
		Latch Assembly - Blower Access Panel (3)	64-102855-01				
15		High Pressure Guard (2)	AS-76160-01H				
16		Heat Exchanger Mounting Frame Assembly	AS-90754-01				
17		Condenser Coil Access Panel - Front	AS-90631-11H				
18		Front Corner Post	AS-90701-05H				

No.	Notes	MODEL TECHNICAL VARIATION COOLING CAPACITY	RKNL- B 072	RKNL- B 073	RKNL- B 090	RKNL- B 102	RKNL- B 120
		PANELS - RIGHT, REAR AND LEFT SIDES (Granite/Steel Gray, After F4411)					
		RIGHT:					
19		Air Stop	N/A	N/A	N/A	N/A	N/A
20		Louver Panel Assembly	See Accessories Group				
		REAR:					
21		Rear Corner Post	AS-90702-03H	AS-90702-03H	AS-90702-03H	AS-90702-03H	AS-90702-03H
22		Condenser Coil Access Panel-Rear	AS-90631-03H	AS-90631-03H	AS-90631-05H	AS-90631-05H	AS-90631-05H
23		Rear Panel	AS-90618-02H	AS-90618-02H	AS-90618-02H	AS-90618-02H	AS-90618-02H
24		Supply Cover	AS-90626-02H	AS-90626-02H	AS-90626-02H	AS-90626-02H	AS-90626-02H
25		Return Cover	AS-90628-02H	AS-90628-02H	AS-90628-02H	AS-90628-02H	AS-90628-02H
		LEFT:					
26		Upper Left Panel	AS-90624-03H	AS-90624-03H	AS-90624-03H	AS-90624-03H	AS-90624-03H
27		Lower Left Panel	AS-90624-04H	AS-90624-04H	AS-90624-04H	AS-90624-04H	AS-90624-04H
28		Left Corner Panel	AS-90755-07H	AS-90755-07H	AS-90755-07H	AS-90755-07H	AS-90755-07H
29		Plate - Receptacle	AS-90756-02H	AS-90756-02H	AS-90756-02H	AS-90756-02H	AS-90756-02H
30		Plate - Disconnect	AS-90756-03H	AS-90756-03H	AS-90756-03H	AS-90756-03H	AS-90756-03H
31		Button Plug (2)	45-22980-06	45-22980-06	45-22980-06	45-22980-06	45-22980-06
32		Button Plug	45-22980-05	45-22980-05	45-22980-05	45-22980-05	45-22980-05
		TOP:					
33		Top Panel Assembly	AS-90775-38H	AS-90775-38H	AS-90775-38H	AS-90775-38H	AS-90775-38H
34		Condenser Top Panel	AS-90703-09H	AS-90703-09H	AS-90703-09H	AS-90703-09H	AS-90703-09H
35		Venturi (2)	AS-90632-03H	AS-90632-03H	AS-90632-03H	AS-90632-03H	AS-90632-03H
36		Wire Grille (2)	95-100906-09	95-100906-09	95-100906-09	95-100906-09	95-100906-09
43		Drain Pan - Removable	See Coil Group				

No.	Notes	MODEL TECHNICAL VARIATION COOLING CAPACITY	RKNL- B 151				
		PANELS - RIGHT, REAR AND LEFT SIDES (Granite/Steel Gray, After F4411)					
		RIGHT:					
19		Air Stop	N/A				
20		Louver Panel Assembly	See Accessories Group				
		REAR:					
21		Rear Corner Post	AS-90702-04H				
22		Condenser Coil Access Panel-Rear	AS-90631-12H				
23		Rear Panel	AS-90618-02H				
24		Supply Cover	AS-90626-02H				
25		Return Cover	AS-90628-02H				
		LEFT:					
26		Upper Left Panel	AS-90624-03H				
27		Lower Left Panel	AS-90624-04H				
28		Left Corner Panel	AS-90755-07H				
29		Plate - Receptacle	AS-90756-02H				
30		Plate - Disconnect	AS-90756-03H				
31		Button Plug (2)	45-22980-06				
32		Button Plug	45-22980-05				
		TOP:					
33		Top Panel Assembly	AS-90775-38H				
34		Condenser Top Panel	AS-90703-08H				
35		Venturi (2)	AS-90632-03H				
36		Wire Grille (2)	95-100906-09				
43		Drain Pan - Removable	See Coil Group				

No.	Notes	MODEL TECHNICAL VARIATION COOLING CAPACITY	RKNL- B 180/210	RKNL- B 240	RKNL- B 241	RKNL- B 300	
		PANELS - RAILS, BASE PANS, INSIDE CABINET (Granite/Steel Gray, After F4411)					
		BASE RAILS:					
A		Front	AS-90827-03	AS-90827-03	AS-90827-03	AS-90827-03	
B		Right	AE-90576-06	AE-90576-06	AE-90576-06	AE-90576-06	
C		Rear	AS-90827-04	AS-90827-04	AS-90827-04	AS-90827-04	
D		Left	AE-90576-05	AE-90576-05	AE-90576-05	AE-90576-05	
		BASE PANS:					
E		Outdoor Base Pan	AS-90583-09H	AS-90583-09H	AS-90583-09	AS-90583-09H	
F		Indoor Coil Base Pan - Return Air	AS-90577-09	AS-90577-09	AS-90577-09	AS-90577-09	
G		Indoor Coil Base Pan - Supply Air	AS-90577-10	AS-90577-10	AS-90577-10	AS-90577-10	
		INSIDE CABINET PANEL/PIECES:					
H 1		Entry Plate	AE-90614-01	AE-90614-01	AE-90614-01	AE-90614-01	
H 2		Entry Plate - Rooftop	AE-90614-01	AE-90614-01	AE-90614-01	AE-90614-01	
I		Post - Blower Section	AS-102682-07H	AS-102682-07H	AE-102682-07H T	AS-102682-07H	
J		Heat Compartment Side	AE-90598-06	AE-90598-06	AE-90598-06	AE-90598-06	
K		Blower Deck Assembly	AS-90592-08	AS-90592-08	AS-90592-08	AS-90592-08	
L		Wireway	AE-90718-04	AE-90718-04	AE-90718-04	AE-90718-04	
M		Condenser Bulkhead	AS-90609-13	AS-90609-13	AS-90609-13	AS-90609-13	
N		Divider Panel - Between Coils	AE-90735-05	AE-90735-05	AE-90735-05	AE-90735-05	
O		Bulkhead Support	AE-102725-01	AE-102725-01	AE-102725-01	AE-102725-01	
P		Primary Drain Pan	AS-103030-02	AS-103030-02	AS-103030-02	AS-103030-02	
		Air Stop - Outdoor Coil- Front	AE-90706-13	AE-90706-13	AE-90706-25	AE-90706-13	
		Air Stop - Outdoor Coil- Rear	AE-90706-12	AE-90706-12	AE-90706-24	AE-90706-12	
U		Coil Support Top	AE-102700-03	AE-102700-03	AE-102700-03	AE-102700-03	
V		Angle - Tube Support (2)	AE-90600-02	AE-90600-02	AE-90600-02	AE-90600-02	

No.	Notes	MODEL TECHNICAL VARIATION COOLING CAPACITY	RKNL- B 180/210	RKNL- B 240	RKNL- B 241	RKNL- B 300	
		PANELS - FRONT AND RIGHT SIDES (Granite/Steel Gray, After F4411)					
1		Control Box Door Assembly - w/Hinges, Latch, Gasket, Insulation	AS-102872-04H	AS-102872-04H	AS-102872-04H T	AS-102872-04H	
2a		Bracket - Top Panel (Left)	AS-102859-01H	AS-102859-01H	AE-102859-01H T	AS-102859-01H	
2b		Bracket - Top Panel (Center)	AS-102969-01H	AS-102969-01H	AS-102969-01H T	AS-102969-01H	
2c		Post - Blower Section	AS-102682-07H	AS-102682-07H	AE-102682-07H T	AS-102682-07H	
3a		Bracket - Bottom Panel (Left)	AS-102859-02H	AS-102859-02H	AE-102859-02H T	AS-102859-02H	
3b		Bracket - Blower/Heater Compartment	AS-102859-04H	AS-102859-04H	AE-102859-04H T	AS-102859-04H	
3c		Bracket - Bottom Panel (Right)	AS-102859-05H	AS-102859-05H	AE-102859-05H T	AS-102859-05H	
4		Post Assembly - Indoor Coil Section	AS-90620-15H	AS-90620-15H	AS-90620-15HT	AS-90620-15H	
5		Control Box Cover	AE-90713-05	AE-90713-05	AE-90713-05	AE-90713-05	
6		Control Mounting Panel	AE-90712-05	AE-90712-05	AE-90712-05	AE-90712-05	
7a		Low Voltage Shield - Control Box (Upper Right)	AE-90742-07	AE-90742-07	AE-90742-07	AE-90742-07	
7b		Low Voltage Shield - Control Box (Lower Left)	AE-90742-06	AE-90742-06	AE-90742-06	AE-90742-06	
7c		Thermostat Chase Cover	AE-102722-01	AE-102722-01	AE-102722-01	AE-102722-01	
8		Control Box Back	AS-90601-05	AS-90601-05	AS-90601-05	AS-90601-05	
9		Mounting Bracket	AE-90779-02	AE-90779-02	AE-90779-02	AE-90779-02	
		Outlet Flue Hood (2)	AS-102966-01	AS-102966-01	AS-102966-01	AS-102966-01	
	4	Inlet Flue Hood - See Note 4	AE-90745-04	AE-90745-04	AE-90745-04	AE-90745-04	
12	4	Gas Heat Access Panel Assembly - w/Hinges, Latch, Gasket, Insulation (025, 030) - See Note 4	AS-102872-11H	AS-102872-12H	AS-102872-12H T	AS-102872-12H	
12	4	Gas Heat Access Panel Assembly - w/Hinges, Latch, Gasket, Insulation (035, 040) - See Note 4	AS-102872-12H	AS-102872-10H	AS-102872-10H T	AS-102872-10H	
13		Power Entry Plate Assembly	AS-90774-12H	AS-90774-12H	AS-90774-12HT	AS-90774-12H	
14		Blower Access Panel Assembly - w/Hinges, Latch, Gasket, Insulation	AS-102872-02H	AS-102872-02H	AS-102872-02H T	AS-102872-02H	
16		Mounting Frame - Heat Exchanger Frame	AS-90754-03	AS-90754-03	AS-90754-03	AS-90754-03	
17		Condenser Coil Access Panel - Front	AS-90734-08H	AS-90734-08H	AE-90734-20HT	AS-90734-08H	
38c		Post - Outdoor Coil (Front)	See Coil Group				
39c		Post - Outdoor Coil (Rear)	See Coil Group				
		Louver Panel (Hail Guard) - Left	AS-90789-10H	AS-90789-10H	AS-90789-10H	AS-90789-10H	
		Louver Panel (Hail Guard) - Right	AS-90789-09H	AS-90789-09H	AS-90789-09H	AS-90789-09H	

No.	Notes	MODEL TECHNICAL VARIATION COOLING CAPACITY	RKNL- B 180/210	RKNL- B 240	RKNL- B 241	RKNL- B 300	
		PANELS - REAR, LEFT, AND TOP (Granite/Steel Gray, After F4411)					
		REAR:					
22		Condenser Coil Access Panel-Rear	AS-90734-09H	AS-90734-09H	AE-90734-21HT	AS-90734-09H	
23		Rear Panel - Right	AS-90618-08H	AS-90618-08H	AS-90618-08HT	AS-90618-08H	
24		Supply Cover	AS-90628-03H	AS-90628-03H	AS-90628-03HT	AS-90628-03H	
25		Return Cover	AS-90628-04H	AS-90628-04H	AS-90628-04HT	AS-90628-04H	
		LEFT:					
26		Upper Left Panel	AS-90624-09H	AS-90624-09H	AS-90624-09HT	AS-90624-09H	
27		Lower Left Panel	AS-90624-08H	AS-90624-08H	AS-90624-08HT	AS-90624-08H	
28		Left Corner Panel Assembly	AS-90755-05H	AS-90755-05H	AS-90755-05HT	AS-90755-05H	
		Bracket - Left Corner Panel Assembly (2)	AE-90779-01	AE-90779-01	AE-90779-01	AE-90779-01	
		Gasket for receptacle plate	68-42514-08	68-42514-08	68-42514-08	68-42514-08	
		Gasket for disconnect plate	68-42514-09	68-42514-09	68-42514-09	68-42514-09	
29		Plate - Install inside Panel-Receptacle	AS-90756-02H	AS-90756-02H	AE-90756-02HT	AS-90756-02H	
30		Plate - Install inside Panel-Disconnect	AS-90756-03H	AS-90756-03H	AE-90756-03HT	AS-90756-03H	
31		Button Plug (3)	45-42558-01	45-42558-01	45-42558-01	45-42558-01	
32		Star Bushing (3)	45-18515-01	45-18515-01	45-18515-01	45-18515-01	
		TOP:					
33a		Top Panel Assembly - Right	AS-90616-04H	AS-90616-04H	AS-90616-04HT	AS-90616-04H	
33b		Top Panel Assembly - Left	AS-90616-05H	AS-90616-05H	AS-90616-05HT	AS-90616-05H	
34a		Top Panel - Front	AS-90633-10H	AS-90633-10H	AE-90633-10HT	AS-90633-10H	
34b		Top Panel - Middle	AS-90633-12H	AS-90633-11H	AE-90633-11HT	AS-90633-11H	
34c		Top Panel - Rear	AS-90633-09H	AS-90633-09H	AE-90633-09HT	AS-90633-09H	
35		Venturi	AS-90632-03H (4)	AS-90632-03H (6)	AE-90632-03HT (6)	AS-90632-03H (6)	
36		Wire Grille	95-100906-09 (4)	95-100906-09 (6)	95-100906-09 (6)	95-100906-09 (6)	
43		Drain Pan - Removable	See Coil Group				

No.	Notes	MODEL TECHNICAL VARIATION COOLING CAPACITY	RKNL- B 072	RKNL- B 085	RKNL- B 090	RKNL- B 102	RKNL- B 120
		PANELS - RAILS, BASE PANS, INSIDE CABINET (Neutra Green, Before F4411)					
		BASE RAILS:					
A		Base Rail - Front	AE-90575-15	AE-90575-15	AE-90575-15	AE-90575-15	AE-90575-15
B		Base Rail - Right	AE-90576-03	AE-90576-03	AE-90576-03	AE-90576-03	AE-90576-03
C		Base Rail - Rear	AE-90575-04	AE-90575-04	AE-90575-04	AE-90575-04	AE-90575-04
D		Base Rail - Left	AE-90576-04	AE-90576-04	AE-90576-04	AE-90576-04	AE-90576-04
		BASE PANS:					
E		Outdoor Coil Base Pan	AS-90583-03A	AS-90583-05A	AS-90583-05A	AS-90583-05A	AS-90583-05A
F		Indoor Coil Base Pan	AS-90577-12	AS-90577-12	AS-90577-12	AS-90577-12	AS-90577-12
		INSIDE CABINET:					
G		Entry Plate	AE-90614-01	AE-90614-01	AE-90614-01	AE-90614-01	AE-90614-01
H		Entry Plate	AE-90614-01	AE-90614-01	AE-90614-01	AE-90614-01	AE-90614-01
J		Heat Compartment Side	AE-90598-07	AE-90598-07	AE-90598-07	AE-90598-07	AE-90598-07
K		Blower Deck	AS-90592-09	AS-90592-10	AS-90592-10	AS-90592-10	AS-90592-10
L		Wireway	AE-90718-05	AE-90718-05	AE-90718-05	AE-90718-05	AE-90718-05
M		Condenser Bulkhead	AS-90592-09	AS-90609-20	AS-90609-15	AS-90609-15	AS-90609-15

No.	Notes	MODEL TECHNICAL VARIATION COOLING CAPACITY	RKNL- B 072	RKNL- B 085	RKNL- B 090	RKNL- B 102	RKNL- B 120
		PANELS - FRONT (Neutra Green, Before F4411)					
1		Control Box Door Assembly - w/Hinges, Latch, Gasket, Insulation	AS-102872-14A	AS-102872-14A	AS-102872-14A	AS-102872-14A	AS-102872-14A
2a		Bracket - Top Panel (Left)	AS-102859-16A	AS-102859-16A	AS-102859-16A	AS-102859-16A	AS-102859-16A
2b		Bracket - Top Panel (Center)	AS-102859-15A	AS-102859-15A	AS-102859-15A	AS-102859-15A	AS-102859-15A
2c		Post - Blower Section	AS-102682-12A	AS-102682-12A	AS-102682-12A	AS-102682-12A	AS-102682-12A
3a		Bracket - Bottom Panel (Left)	AS-102859-17A	AS-102859-17A	AS-102859-17A	AS-102859-17A	AS-102859-17A
3b		Bracket - Blower/Heater Compartment	AS-102859-14A	AS-102859-14A	AS-102859-14A	AS-102859-14A	AS-102859-14A
3c		Bracket - Bottom Panel (Right)	AS-102859-13A	AS-102859-13A	AS-102859-13A	AS-102859-13A	AS-102859-13A
		Latch Assembly - Control Box Door (2)	64-102855-01	64-102855-01	64-102855-01	64-102855-01	64-102855-01
4		Post Assembly - Indoor Coil Section	AS-90620-18A	AS-90620-18A	AS-90620-17A	AS-90620-17A	AS-90620-17A
5		Control Box Cover	AE-90713-02	AE-90713-02	AE-90713-02	AE-90713-02	AE-90713-02
6		Control Mounting Plate	AE-90712-06	AE-90712-06	AE-90712-06	AE-90712-06	AE-90712-06
7a		Low Voltage Shield - Upper Straight	AE-90742-08	AE-90742-08	AE-90742-08	AE-90742-08	AE-90742-08
7b		Low Voltage Shield - Lower	AE-90742-03	AE-90742-03	AE-90742-03	AE-90742-03	AE-90742-03
7c		Low Voltage Shield - Middle Strip	AE-90742-09	AE-90742-09	AE-90742-09	AE-90742-09	AE-90742-09
8		Control Box Back Insulation Assembly	AS-90601-06	AS-90601-06	AS-90601-06	AS-90601-06	AS-90601-06
9		Mounting Bracket	AE-90779-02	AE-90779-02	AE-90779-02	AE-90779-02	AE-90779-02
		Outlet Flue Hood	AS-102966-01	AS-102966-01	AS-102966-01	AS-102966-01	AS-102966-01
	4	Inlet Flue Hood (2) - See Note 4	AE-90745-04	AE-90745-04	AE-90745-04	AE-90745-04	AE-90745-04
12	4	Gas Heat Access Panel Assembly - w/Hinges, Latch, Gasket, Insulation - See Note 4	AS-102872-20A	AS-102872-20A	AS-102872-20A	AS-102872-20A	AS-102872-20A
		Latch Assembly - Electric Heat Door (2)	64-102855-01	64-102855-01	64-102855-01	64-102855-01	64-102855-01
13		Gas Pipe Support Plate	AS-90774-10A	AS-90774-10A	AS-90774-10A	AS-90774-10A	AS-90774-10A
14		Blower Access Panel Assembly - w/Hinges, Latch, Gasket, Insulation	AS-102872-16A	AS-102872-16A	AS-102872-16A	AS-102872-16A	AS-102872-16A
		Latch Assembly - Blower Access Panel (3)	64-102855-01	64-102855-01	64-102855-01	64-102855-01	64-102855-01
15		High Pressure Guard (2)	AS-76160-01A	AS-76160-01A	AS-76160-01A	AS-76160-01A	AS-76160-01A
16		Heat Exchanger Mounting Frame Assembly	AS-90754-01	AS-90754-01	AS-90754-01	AS-90754-01	AS-90754-01
17		Condenser Coil Access Panel - Front	AS-90631-10A	AS-90631-09A	AS-90631-09A	AS-90631-09A	AS-90631-09A
18		Front Corner Post	AS-90701-06A	AS-90701-06A	AS-90701-06A	AS-90701-06A	AS-90701-06A

No.	Notes	MODEL TECHNICAL VARIATION COOLING CAPACITY	RKNL- B 150	RKNL- B 151			
		PANELS - RAILS, BASE PANS, INSIDE CABINET (Neutra Green, Before F4411)					
		BASE RAILS:					
A		Base Rail - Front	AE-90575-15	AE-90575-15			
B		Base Rail - Right	AE-90576-03	AE-90576-03			
C		Base Rail - Rear	AE-90575-04	AE-90575-04			
D		Base Rail - Left	AE-90576-04	AE-90576-04			
		BASE PANS:					
E		Outdoor Coil Base Pan	AS-90577-14A	AS-90577-14A			
F		Indoor Coil Base Pan	AS-90577-12	AS-90577-12			
		INSIDE CABINET:					
G		Entry Plate	AE-90614-01	AE-90614-01			
H		Entry Plate	AE-90614-01	AE-90614-01			
J		Heat Compartment Side	AE-90598-07	AE-90598-07			
K		Blower Deck	AS-90592-10	AS-90592-10			
L		Wireway	AE-90718-05	AE-90718-05			
M		Condenser Bulkhead	AS-90609-19	AS-90609-19			

No.	Notes	MODEL TECHNICAL VARIATION COOLING CAPACITY	RKNL- B 150	RKNL- B 151			
		PANELS - FRONT (Neutra Green, Before F4411)					
1		Control Box Door Assembly - w/Hinges, Latch, Gasket, Insulation	AS-102872-14A	AS-102872-14A			
2a		Bracket - Top Panel (Left)	AS-102859-16A	AS-102859-16A			
2b		Bracket - Top Panel (Center)	AS-102859-15A	AS-102859-15A			
2c		Post - Blower Section	AS-102682-12A	AS-102682-12A			
3a		Bracket - Bottom Panel (Left)	AS-102859-17A	AS-102859-17A			
3b		Bracket - Blower/Heater Compartment	AS-102859-14A	AS-102859-14A			
3c		Bracket - Bottom Panel (Right)	AS-102859-13A	AS-102859-13A			
		Latch Assembly - Control Box Door (2)	64-102855-01	64-102855-01			
4		Post Assembly - Indoor Coil Section	AS-90620-17A	AS-90620-17A			
5		Control Box Cover	AE-90713-02	AE-90713-02			
6		Control Mounting Plate	AE-90712-06	AE-90712-06			
7a		Low Voltage Shield - Upper Straight	AE-90742-08	AE-90742-08			
7b		Low Voltage Shield - Lower	AE-90742-03	AE-90742-03			
7c		Low Voltage Shield - Middle Strip	AE-90742-09	AE-90742-09			
8		Control Box Back Insulation Assembly	AS-90601-06	AS-90601-06			
9		Mounting Bracket	AE-90779-02	AE-90779-02			
		Outlet Flue Hood	AS-102966-01	AS-102966-01			
	4	Inlet Flue Hood (2) - See Note 4	AE-90745-04	AE-90745-04			
12	4	Gas Heat Access Panel Assembly - w/Hinges, Latch, Gasket, Insulation - See Note 4	AS-102872-20A	AS-102872-20A			
		Latch Assembly - Electric Heat Door (2)	64-102855-01	64-102855-01			
13		Gas Pipe Support Plate	AS-90774-10A	AS-90774-10A			
14		Blower Access Panel Assembly - w/Hinges, Latch, Gasket, Insulation	AS-102872-16A	AS-102872-16A			
		Latch Assembly - Blower Access Panel (3)	64-102855-01	64-102855-01			
15		High Pressure Guard (2)	AS-76160-01A	AS-76160-01A			
16		Heat Exchanger Mounting Frame Assembly	AS-90754-01	AS-90754-01			
17		Condenser Coil Access Panel - Front	AS-90631-11A	AS-90631-11A			
18		Front Corner Post	AS-90701-05A	AS-90701-05A			

No.	Notes	MODEL TECHNICAL VARIATION COOLING CAPACITY	RKNL- B 072	RKNL- B 085	RKNL- B 090	RKNL- B 102	RKNL- B 120
		PANELS - RIGHT, REAR AND LEFT SIDES (Neutra Green, Before F4411)					
		RIGHT:					
19		Air Stop	N/A	N/A	N/A	N/A	N/A
20		Louver Panel Assembly	See Accessories Group				
		REAR:					
21		Rear Corner Post	AS-90702-03A	AS-90702-03A	AS-90702-03A	AS-90702-03A	AS-90702-03A
22		Condenser Coil Access Panel-Rear	AS-90631-03A	AS-90631-05A	AS-90631-05A	AS-90631-05A	AS-90631-05A
23		Rear Panel	AS-90618-02A	AS-90618-02A	AS-90618-02A	AS-90618-02A	AS-90618-02A
24		Supply Cover	AS-90626-02A	AS-90626-02A	AS-90626-02A	AS-90626-02A	AS-90626-02A
25		Return Cover	AS-90628-02A	AS-90628-02A	AS-90628-02A	AS-90628-02A	AS-90628-02A
		LEFT:					
26		Upper Left Panel	AS-90624-03A	AS-90624-03A	AS-90624-03A	AS-90624-03A	AS-90624-03A
27		Lower Left Panel	AS-90624-04A	AS-90624-04A	AS-90624-04A	AS-90624-04A	AS-90624-04A
28		Left Corner Panel	AS-90755-07A	AS-90755-07A	AS-90755-07A	AS-90755-07A	AS-90755-07A
29		Plate - Receptacle	AS-90756-02A	AS-90756-02A	AS-90756-02A	AS-90756-02A	AS-90756-02A
30		Plate - Disconnect	AS-90756-03A	AS-90756-03A	AS-90756-03A	AS-90756-03A	AS-90756-03A
31		Button Plug (2)	45-22980-06	45-22980-06	45-22980-06	45-22980-06	45-22980-06
32		Button Plug	45-22980-05	45-22980-05	45-22980-05	45-22980-05	45-22980-05
		TOP:					
33		Top Panel Assembly	AS-90775-38A	AS-90775-38A	AS-90775-38A	AS-90775-38A	AS-90775-38A
34		Condenser Top Panel	AS-90703-09A	AS-90703-09A	AS-90703-09A	AS-90703-09A	AS-90703-09A
35		Venturi	AS-90632-03A (2)	AS-90632-03A (2)	AS-90632-03A (2)	AS-90632-03A (2)	AS-90632-03A (2)
36		Wire Grille	95-100906-09 (2)	95-100906-09 (2)	95-100906-09 (2)	95-100906-09 (2)	95-100906-09 (2)
43		Drain Pan - Removable	See Coil Group				

No.	Notes	MODEL TECHNICAL VARIATION COOLING CAPACITY	RKNL- B 150	RKNL- B 151			
		PANELS - RIGHT, REAR AND LEFT SIDES (Neutra Green, Before F4411)					
		RIGHT:					
19		Air Stop	N/A	N/A			
20		Louver Panel Assembly	AS-90789-03A	See Accessories Group			
		REAR:					
21		Rear Corner Post	AS-90702-04A	AS-90702-04A			
22		Condenser Coil Access Panel-Rear	AS-90631-12A	AS-90631-12A			
23		Rear Panel	AS-90618-02A	AS-90618-02A			
24		Supply Cover	AS-90626-02A	AS-90626-02A			
25		Return Cover	AS-90628-02A	AS-90628-02A			
		LEFT:					
26		Upper Left Panel	AS-90624-03A	AS-90624-03A			
27		Lower Left Panel	AS-90624-04A	AS-90624-04A			
28		Left Corner Panel	AS-90755-07A	AS-90755-07A			
29		Plate - Receptacle	AS-90756-02A	AS-90756-02A			
30		Plate - Disconnect	AS-90756-03A	AS-90756-03A			
31		Button Plug (2)	45-22980-06	45-22980-06			
32		Button Plug	45-22980-05	45-22980-05			
		TOP:					
33		Top Panel Assembly	AS-90775-38A	AS-90775-38A			
34		Condenser Top Panel	AS-90703-08A	AS-90703-08A			
35		Venturi	AS-90632-03A (2)	AS-90632-03A (2)			
36		Wire Grille	95-100906-09 (2)	95-100906-09 (2)			
43		Drain Pan - Removable	See Coil Group				

No.	Notes	MODEL TECHNICAL VARIATION COOLING CAPACITY	RKNL- B 180/210	RKNL- B 240	RKNL- B 300		
		PANELS - RAILS, BASE PANS, INSIDE CABINET (Neutra Green, Before F4411)					
		BASE RAILS:					
A		Front	AS-90827-03	AS-90827-03	AS-90827-03		
B		Right	AE-90576-06	AE-90576-06	AE-90576-06		
C		Rear	AS-90827-04	AS-90827-04	AS-90827-04		
D		Left	AE-90576-05	AE-90576-05	AE-90576-05		
		BASE PANS:					
E		Outdoor Base Pan	AS-90583-09A	AS-90583-09A	AS-90583-09A		
F		Indoor Coil Base Pan - Return Air	AS-90577-09	AS-90577-09	AS-90577-09		
G		Indoor Coil Base Pan - Supply Air	AS-90577-10	AS-90577-10	AS-90577-10		
		INSIDE CABINET PANEL/PIECES:					
H 1		Entry Plate	AE-90614-01	AE-90614-01	AE-90614-01		
H 2		Entry Plate - Rooftop	AE-90614-01	AE-90614-01	AE-90614-01		
I		Post - Blower Section	AS-102682-07A	AS-102682-07A	AS-102682-07A		
J		Heat Compartment Side	AE-90598-06	AE-90598-06	AE-90598-06		
K		Blower Deck Assembly	AS-90592-08	AS-90592-08	AS-90592-08		
L		Wireway	AE-90718-04	AE-90718-04	AE-90718-04		
M		Condenser Bulkhead	AS-90609-13	AS-90609-13	AS-90609-13		
N		Divider Panel - Between Coils	AE-90735-05	AE-90735-05	AE-90735-05		
O		Bulkhead Support	AE-102725-01	AE-102725-01	AE-102725-01		
P		Primary Drain Pan	AS-103030-02	AS-103030-02	AS-103030-02		
		Air Stop - Outdoor Coil- Front	AE-90706-13	AE-90706-13	AE-90706-13		
		Air Stop - Outdoor Coil- Rear	AE-90706-12	AE-90706-12	AE-90706-12		
U		Coil Support Top	AE-102700-03	AE-102700-03	AE-102700-03		
V		Angle - Tube Support (2)	AE-90600-02	AE-90600-02	AE-90600-02		

No.	Notes	MODEL TECHNICAL VARIATION COOLING CAPACITY	RKNL- B 180/210	RKNL- B 240	RKNL- B 300		
		PANELS - FRONT AND RIGHT SIDES (Neutra Green, Before F4411)					
1		Control Box Door Assembly - w/Hinges, Latch, Gasket, Insulation	AS-102872-04A	AS-102872-04A	AS-102872-04A		
2a		Bracket - Top Panel (Left)	AS-102859-01A	AS-102859-01A	AS-102859-01A		
2b		Bracket - Top Panel (Center)	AS-102969-01A	AS-102969-01A	AS-102969-01A		
2c		Post - Blower Section	AS-102682-07A	AS-102682-07A	AS-102682-07A		
3a		Bracket - Bottom Panel (Left)	AS-102859-02A	AS-102859-02A	AS-102859-02A		
3b		Bracket - Blower/Heater Compartment	AS-102859-04A	AS-102859-04A	AS-102859-04A		
3c		Bracket - Bottom Panel (Right)	AS-102859-05A	AS-102859-05A	AS-102859-05A		
4		Post Assembly - Indoor Coil Section	AS-90620-15A	AS-90620-15A	AS-90620-15A		
5		Control Box Cover	AE-90713-05	AE-90713-05	AE-90713-05		
6		Control Mounting Panel	AE-90712-05	AE-90712-05	AE-90712-05		
7a		Low Voltage Shield - Control Box (Upper Right)	AE-90742-07	AE-90742-07	AE-90742-07		
7b		Low Voltage Shield - Control Box (Lower Left)	AE-90742-06	AE-90742-06	AE-90742-06		
7c		Thermostat Chase Cover	AE-102722-01	AE-102722-01	AE-102722-01		
8		Control Box Back	AS-90601-05	AS-90601-05	AS-90601-05		
9		Mounting Bracket	AE-90779-02	AE-90779-02	AE-90779-02		
		Outlet Flue Hood (2)	AS-102966-01	AS-102966-01	AS-102966-01		
	4	Inlet Flue Hood - See Note 4	AE-90745-04	AE-90745-04	AE-90745-04		
12	4	Gas Heat Access Panel Assembly - w/Hinges, Latch, Gasket, Insulation (025, 030) - See Note 4	AS-102872-11A	AS-102872-12A	AS-102872-12A		
12	4	Gas Heat Access Panel Assembly - w/Hinges, Latch, Gasket, Insulation (035, 040) - See Note 4	AS-102872-12A	AS-102872-10A	AS-102872-10A		
13		Power Entry Plate Assembly	AS-90774-12A	AS-90774-12A	AS-90774-12A		
14		Blower Access Panel Assembly - w/Hinges, Latch, Gasket, Insulation	AS-102872-02A	AS-102872-02A	AS-102872-02A		
16		Mounting Frame - Heat Exchanger Frame	AS-90754-03	AS-90754-03	AS-90754-03		
17		Condenser Coil Access Panel - Front	AS-90734-08A	AS-90734-08A	AS-90734-08A		
38c		Post - Outdoor Coil (Front)	See Coil Group				
39c		Post - Outdoor Coil (Rear)	See Coil Group				

No.	Notes	MODEL TECHNICAL VARIATION COOLING CAPACITY	RKNL- B 180/210	RKNL- B 240	RKNL- B 300		
		PANELS - REAR, LEFT, AND TOP (Neutra Green, Before F4411)					
		REAR:					
22		Condenser Coil Access Panel-Rear	AS-90734-09A	AS-90734-09A	AS-90734-09A		
23		Rear Panel - Right	AS-90618-08A	AS-90618-08A	AS-90618-08A		
24		Supply Cover	AS-90628-03A	AS-90628-03A	AS-90628-03A		
25		Return Cover	AS-90628-04A	AS-90628-04A	AS-90628-04A		
		LEFT:					
26		Upper Left Panel	AS-90624-09A	AS-90624-09A	AS-90624-09A		
27		Lower Left Panel	AS-90624-08A	AS-90624-08A	AS-90624-08A		
28		Left Corner Panel Assembly	AS-90755-05A	AS-90755-05A	AS-90755-05A		
		Bracket - Left Corner Panel Assembly (2)	AE-90779-01	AE-90779-01	AE-90779-01		
		Gasket for receptacle plate	68-42514-08	68-42514-08	68-42514-08		
		Gasket for disconnect plate	68-42514-09	68-42514-09	68-42514-09		
29		Plate - Install inside Panel-Receptacle	AS-90756-02A	AS-90756-02A	AS-90756-02A		
30		Plate - Install inside Panel-Disconnect	AS-90756-03A	AS-90756-03A	AS-90756-03A		
31		Button Plug (3)	45-42558-01	45-42558-01	45-42558-01		
32		Star Bushing (3)	45-18515-01	45-18515-01	45-18515-01		
		TOP:					
33a		Top Panel Assembly - Right	AS-90616-04A	AS-90616-04A	AS-90616-04A		
33b		Top Panel Assembly - Left	AS-90616-05A	AS-90616-05A	AS-90616-05A		
34a		Top Panel - Front	AS-90633-10A	AS-90633-10A	AS-90633-10A		
34b		Top Panel - Middle	AS-90633-12A	AS-90633-11A	AS-90633-11A		
34c		Top Panel - Rear	AS-90633-09A	AS-90633-09A	AS-90633-09A		
35		Venturi	AS-90632-03A (4)	AS-90632-03A (6)	AS-90632-03A (6)		
36		Wire Grille	95-100906-09 (4)	95-100906-09 (6)	95-100906-09 (6)		
43		Drain Pan - Removable	See Coil Group				

No.	Notes	MODEL TECHNICAL VARIATION COOLING CAPACITY ELECTRICAL DESIGNATION	RKNL- B 072 C	RKNL- B 073 C	RKNL- B 085 C	RKNL- B 090 C	RKNL- B 102 C
		ELECTRICAL GROUP					
		CONTROL BOX COMPONENTS:					
57a	Stk	Transformer - Control	46-42515-01	46-42515-01	46-42515-01	46-42515-01	46-42515-01
58a		Double Row Terminal Block	45-42548-02	45-42548-02	45-42548-02	45-42548-02	45-42548-02
58c		Ground Lug	45-19000-02	45-19000-02	45-19000-02	45-19000-02	45-19000-02
59	Stk	Contactor - Blower	42-22464-01	42-22464-01	42-22464-01	42-22464-01	42-22464-01
60		Capacitor - Fan Motor	See Fan Group				
		High Pressure Control	See Coil Group				
		Low Pressure Control	See Coil Group				
61		Integrated Furnace Control Board (IFC)	See Gas Controls				
		Pressure Control Board - On or after F4112	N/A	N/A	N/A	N/A	N/A
62	Stk	Contactor - Compressor	42-22464-03 (1)	42-22464-03 (1)	42-22464-03 (1)	42-22464-01 (2)	42-22464-01 (2)
		WIRING HARNESSES:					
		Wiring Harness - Fan Motor #1	See Fan Group				
		Wiring Harness - Fan Motor #2	See Fan Group				
		Wiring Harness - Twist-Loc 12 Pin to 9 Pin	45-102706-05	45-102706-05	45-102706-05	45-102706-05	45-102706-05
		Wiring Harness - Twist-Loc (12 Pin to 3 Pin and 7 Connectors) (15E)	45-102706-06	45-102706-06	45-102706-06	45-102706-06	45-102706-06
		Wiring Harness - Twist-Loc (12 Pin to 10 Connectors) (22E, 25E)	45-102706-10	45-102706-10	45-102706-10	45-102706-10	45-102706-10
		Plug Harness - Compressor	See Compressor Group				
		Wirng Harness - Induced Draft Blower	45-42522-19	45-42522-19	45-42522-19	45-42522-19	45-42522-19
		Bypass Plug - Economizer 12 Pin	AS-61997-55	AS-61997-55	AS-61997-55	AS-61997-55	AS-61997-55
		High/Low Pressure Switch Assembly (Includes both Switches and Wiring Harness)	See Coil Group				

No.	Notes	MODEL TECHNICAL VARIATION COOLING CAPACITY ELECTRICAL DESIGNATION	RKNL- B 120 C	RKNL- B 150/151 C			
		ELECTRICAL GROUP					
		CONTROL BOX COMPONENTS:					
57a	Stk	Transformer - Control	46-42515-01	46-42515-01			
58a		Double Row Terminal Block	45-42548-02	45-42548-02			
58c		Ground Lug	45-19000-02	45-19000-02			
59	Stk	Contactor - Blower	42-22464-01	42-22464-01			
60		Capacitor - Fan Motor	See Fan Group				
		High Pressure Control	See Coil Group				
		Low Pressure Control	See Coil Group				
61		Integrated Furnace Control Board (IFC)	See Gas Controls				
		Pressure Control Board - On or after F4112	N/A	47-104319-02 (151 only)			
62	Stk	Contactor - Compressor	42-22464-01 (2)	42-22464-01 (2)			
		WIRING HARNESSES:					
		Wiring Harness - Fan Motor #1	See Fan Group				
		Wiring Harness - Fan Motor #2	See Fan Group				
		Wiring Harness - Twist-Loc 12 Pin to 9 Pin	45-102706-05	45-102706-05			
		Wiring Harness - Twist-Loc (12 Pin to 3 Pin and 7 Connectors) (15E)	45-102706-06	45-102706-06			
		Wiring Harness - Twist-Loc (12 Pin to 10 Connectors) (22E, 25E)	45-102706-10	45-102706-10			
		Plug Harness - Compressor	See Compressor Group				
		Wirng Harness - Induced Draft Blower	45-42522-19	45-42522-19			
		Bypass Plug - Economizer 12 Pin	AS-61997-55	AS-61997-55			
		High/Low Pressure Switch Assembly (Includes both Switches and Wiring Harness)	See Coil Group				

No.	Notes	MODEL TECHNICAL VARIATION COOLING CAPACITY ELECTRICAL DESIGNATION	RKNL- B 072 D	RKNL- B 073 D	RKNL- B 085 D	RKNL- B 090 D	RKNL- B 102 D
		ELECTRICAL GROUP					
		CONTROL BOX COMPONENTS:					
57a	Stk	Transformer - Control	46-42515-02	46-42515-02	46-42515-02	46-42515-02	46-42515-02
58a		Double Row Terminal Block	45-42548-02	45-42548-02	45-42548-02	45-42548-02	45-42548-02
58c		Ground Lug	45-19000-02	45-19000-02	45-19000-02	45-19000-02	45-19000-02
59	Stk	Contactor - Blower	42-22464-01	42-22464-01	42-22464-01	42-22464-01	42-22464-01
60		Capacitor - Fan Motor	See Fan Group				
		High Pressure Control	See Coil Group				
		Low Pressure Control	See Coil Group				
61		Integrated Furnace Control Board (IFC)	See Gas Controls				
		Pressure Control Board - On or after F4112	N/A	N/A	N/A	N/A	N/A
62	Stk	Contactor - Compressor	42-22464-03 (1)	42-22464-03 (1)	42-22464-03 (1)	42-22464-01 (2)	42-22464-01 (2)
		WIRING HARNESSES:					
		Wiring Harness - Fan Motor #1	See Fan Group				
		Wiring Harness - Fan Motor #2	See Fan Group				
		Wiring Harness - Twist-Loc 12 Pin to 9 Pin	45-102706-05	45-102706-05	45-102706-05	45-102706-05	45-102706-05
		Wiring Harness - Twist-Loc (12 Pin to 3 Pin and 7 Connectors) (15E)	45-102706-06	45-102706-06	45-102706-06	45-102706-06	45-102706-06
		Wiring Harness - Twist-Loc (12 Pin to 10 Connectors) (22E, 25E)	45-102706-10	45-102706-10	45-102706-10	45-102706-10	45-102706-10
		Plug Harness - Compressor	See Compressor Group				
		Wirng Harness - Induced Draft Blower	45-42522-19	45-42522-19	45-42522-19	45-42522-19	45-42522-19
		Bypass Plug - Economizer 12 Pin	AS-61997-55	AS-61997-55	AS-61997-55	AS-61997-55	AS-61997-55
		High/Low Pressure Switch Assembly (Includes both switches and Wiring Harness)	See Coil Group				

No.	Notes	MODEL TECHNICAL VARIATION COOLING CAPACITY ELECTRICAL DESIGNATION	RKNL- B 120 D	RKNL- B 150/151 D			
		ELECTRICAL GROUP					
		CONTROL BOX COMPONENTS:					
57a	Stk	Transformer - Control	46-42515-02	46-42515-02			
58a		Double Row Terminal Block	45-42548-02	45-42548-02			
58c		Ground Lug	45-19000-02	45-19000-02			
59	Stk	Contactor - Blower	42-22464-01	42-22464-01			
60		Capacitor - Fan Motor	See Fan Group				
		High Pressure Control	See Coil Group				
		Low Pressure Control	See Coil Group				
61		Integrated Furnace Control Board (IFC)	See Gas Controls				
		Pressure Control Board - On or after F4112	N/A	47-104319-02 (151 only)			
62	Stk	Contactor - Compressor	42-22464-01 (2)	42-22464-01 (2)			
		WIRING HARNESSES:					
		Wiring Harness - Fan Motor #1	See Fan Group				
		Wiring Harness - Fan Motor #2	See Fan Group				
		Wiring Harness - Twist-Loc 12 Pin to 9 Pin	45-102706-05	45-102706-05			
		Wiring Harness - Twist-Loc (12 Pin to 3 Pin and 7 Connectors) (15E)	45-102706-06	45-102706-06			
		Wiring Harness - Twist-Loc (12 Pin to 10 Connectors) (22E, 25E)	45-102706-10	45-102706-10			
		Plug Harness - Compressor	See Compressor Group				
		Wirng Harness - Induced Draft Blower	45-42522-19	45-42522-19			
		Bypass Plug - Economizer 12 Pin	AS-61997-55	AS-61997-55			
		High/Low Pressure Switch Assembly (Includes both switches and Wiring Harness)	See Coil Group				

No.	Notes	MODEL TECHNICAL VARIATION COOLING CAPACITY ELECTRICAL DESIGNATION	RKNL- B 072 Y	RKNL- B 073 Y	RKNL- B 085 Y	RKNL- B 090 Y	RKNL- B 102 Y
		ELECTRICAL GROUP					
		CONTROL BOX COMPONENTS:					
57a	Stk	Transformer - Control	46-42515-01	46-42515-01	46-42515-01	46-42515-01	46-42515-01
57b	Stk	Transformer - Power Step Down (2)	46-23585-01	46-23585-01	46-23585-01	46-23585-01	46-23585-01
58a		Double Row Terminal Block	45-42548-02	45-42548-02	45-42548-02	45-42548-02	45-42548-02
58c		Ground Lug	45-19000-02	45-19000-02	45-19000-02	45-19000-02	45-19000-02
59	Stk	Contactor - Blower	42-22464-01	42-22464-01	42-22464-01	42-22464-01	42-22464-01
60		Capacitor - Fan Motor	See Fan Group				
		High Pressure Control	See Coil Group				
		Low Pressure Control	See Coil Group				
61		Integrated Furnace Control Board (IFC)	See Gas Controls				
		Pressure Control Board - On or after F4112	N/A	N/A	N/A	N/A	N/A
62	Stk	Contactor - Compressor	42-22464-03 (1)	42-22464-03 (1)	42-22464-03 (1)	42-22464-01 (2)	42-22464-01 (2)
		WIRING HARNESSES:					
		Wiring Harness - Fan Motor #1	See Fan Group				
		Wiring Harness - Fan Motor #2	See Fan Group				
		Wiring Harness - Twist-Loc 12 Pin to 9 Pin	45-102706-05	45-102706-05	45-102706-05	45-102706-05	45-102706-05
		Wiring Harness - Twist-Loc (12 Pin to 3 Pin and 7 Connectors) (15E)	45-102706-06	45-102706-06	45-102706-06	45-102706-06	45-102706-06
		Wiring Harness - Twist-Loc (12 Pin to 10 Connectors) (22E, 25E)	45-102706-10	45-102706-10	45-102706-10	45-102706-10	45-102706-10
		Plug Harness - Compressor	See Compressor Group				
		Wiring Harness - Induced Draft Blower	45-42522-19	45-42522-19	45-42522-19	45-42522-19	45-42522-19
		Bypass Plug - Economizer 12 Pin	AS-61997-55	AS-61997-55	AS-61997-55	AS-61997-55	AS-61997-55
		High/Low Pressure Switch Assembly (Includes both Switches and Wiring Harness)	See Coil Group				

No.	Notes	MODEL TECHNICAL VARIATION COOLING CAPACITY ELECTRICAL DESIGNATION	RKNL- B 120 Y	RKNL- B 150/151 Y			
		ELECTRICAL GROUP					
		CONTROL BOX COMPONENTS:					
57a	Stk	Transformer - Control	46-42515-01	46-42515-01			
57b	Stk	Transformer - Power Step Down (2)	46-23585-01	46-23585-01			
58a		Double Row Terminal Block	45-42548-02	45-42548-02			
58c		Ground Lug	45-19000-02	45-19000-02			
59	Stk	Contactor - Blower	42-22464-01	42-22464-01			
60		Capacitor - Fan Motor	See Fan Group				
		High Pressure Control	See Coil Group				
		Low Pressure Control	See Coil Group				
61		Integrated Furnace Control Board (IFC)	See Gas Controls				
		Pressure Control Board - On or after F4112	N/A	47-104319-02 (151 only)			
62	Stk	Contactor - Compressor	42-22464-01 (2)	42-22464-01 (2)			
		WIRING HARNESSES:					
		Wiring Harness - Fan Motor #1	See Fan Group				
		Wiring Harness - Fan Motor #2	See Fan Group				
		Wiring Harness - Twist-Loc 12 Pin to 9 Pin	45-102706-05	45-102706-05			
		Wiring Harness - Twist-Loc (12 Pin to 3 Pin and 7 Connectors) (15E)	45-102706-06	45-102706-06			
		Wiring Harness - Twist-Loc (12 Pin to 10 Connectors) (22E, 25E)	45-102706-10	45-102706-10			
		Plug Harness - Compressor	See Compressor Group				
		Wiring Harness - Induced Draft Blower	45-42522-19	45-42522-19			
		Bypass Plug - Economizer 12 Pin	AS-61997-55	AS-61997-55			
		High/Low Pressure Switch Assembly (Includes both Switches and Wiring Harness)	See Coil Group				

No.	Notes	MODEL TECHNICAL VARIATION COOLING CAPACITY ELECTRICAL DESIGNATION	RKNL- B 180/210 C	RKNL- B 240 C	RKNL- B 241 C	RKNL- B 300 C	
		ELECTRIC GROUP					
		CONTROL BOX COMPONENTS:					
57a	Stk	Transformer - Control	46-42515-04	46-42515-04	46-42515-04	46-42515-04	
58a		Terminal Block - Double Row	45-42548-02	45-42548-02	45-42548-02	45-42548-02	
58b		Terminal Block	45-21134-04	45-21134-04	45-21134-04	45-21134-04	
58c		Ground Lug	45-19000-02	45-19000-02	45-19000-02	45-19000-02	
59	Stk	Contactor - Blower	42-102664-08	42-102664-08	42-102664-08	42-102664-08	
60		Run Capacitor	See Fan Group				
		High Pressure Control	See Coil Group				
		Low Pressure Control	See Coil Group				
61		Integrated Furnace Control Board (IFC)	See Gas Controls				
62a	Stk	Compressor #1 Contactor	42-102664-12	42-102664-12	42-102664-26	42-22464-04	
62b	Stk	Compressor #2 Contactor	42-102664-12	42-22464-04	42-102664-12	42-22464-04	
		WIRING HARNESSES:					
		Wiring Harness - Motor #1	See Fan Group				
		Wiring Harness - Motor #2	See Fan Group				
		Plug Harness - Compressor	See Compressor Group				
		Bypass Plug - Economizer 12 Pin	AS-61997-55	AS-61997-55	45-61997-55	AS-61997-55	
		Wiring Harness - Induced Draft Blower (25E)	45-42522-87	N/A	N/A	N/A	
		Wiring Harness - Induced Draft Blower (30E,35E)	45-42522-86	45-42522-86	45-42522-86	45-42522-86	
		Wiring Harness - Induced Draft Blower (40E)	N/A	45-42522-90	45-42522-90	45-42522-90	
		Wiring Harness - Economizer (12 pin to 9 pin)	45-42522-89	45-42522-89	45-42522-89	45-42522-89	
		Wiring Harness - Furnace Control	45-42522-88	45-42522-88	45-42522-88	45-42522-88	
		High/Low Pressure Switch Assembly (Includes both Switches and Wiring Harness)	See Coil Group				

No.	Notes	MODEL TECHNICAL VARIATION COOLING CAPACITY ELECTRICAL DESIGNATION	RKNL- B 180/210 D	RKNL- B 240 D	RKNL- B 241 D	RKNL- B 300 D	
		ELECTRIC GROUP					
		CONTROL BOX COMPONENTS:					
57a	Stk	Transformer - Control	46-42515-05	46-42515-05	46-42515-05	46-42515-05	
58a		Terminal Block - Double Row	45-42548-02	45-42548-02	45-42548-02	45-42548-02	
58b		Terminal Block	45-21134-04	45-21134-04	45-21134-04	45-21134-04	
58c		Ground Lug	45-19000-02	45-19000-02	45-19000-02	45-19000-02	
59	Stk	Contactor - Blower	42-102664-08	42-22464-01	42-102664-08	42-102664-08	
60		Run Capacitor	See Fan Group				
		High Pressure Control	See Coil Group				
		Low Pressure Control	See Coil Group				
61		Integrated Furnace Control	See Gas Controls				
62a	Stk	Compressor #1 Contactor	42-102664-12	42-102664-12	42-102664-26	42-22464-04	
62b	Stk	Compressor #2 Contactor	42-102664-12	42-22464-04	42-102664-12	42-22464-04	
		WIRING HARNESSES:					
		Wiring Harness - Motor #1	See Fan Group				
		Wiring Harness - Motor #2	See Fan Group				
		Plug Harness - Compressor	See Compressor Group				
		Bypass Plug - Economizer 12 Pin	AS-61997-55	AS-61997-55	45-61997-55	AS-61997-55	
		Wiring Harness - Induced Draft Blower (25E)	45-42522-87	N/A	N/A	N/A	
		Wiring Harness - Induced Draft Blower (30E,35E)	45-42522-86	45-42522-86	45-42522-86	45-42522-86	
		Wiring Harness - Induced Draft Blower (40E)	N/A	45-42522-90	45-42522-90	45-42522-90	
		Wiring Harness - Economizer (12 pin to 9 pin)	45-42522-89	45-42522-89	45-42522-89	45-42522-89	
		Wiring Harness - Furnace Control	45-42522-88	45-42522-88	45-42522-88	45-42522-88	
		High/Low Pressure Switch Assembly (Includes both Switches and Wiring Harness)	See Coil Group				

No.	Notes	MODEL TECHNICAL VARIATION COOLING CAPACITY ELECTRICAL DESIGNATION	RKNL- B 180/210 Y	RKNL- B 240 Y	RKNL- B 241 Y	RKNL- B 300 Y	
		ELECTRIC GROUP					
		CONTROL BOX COMPONENTS:					
57a	Stk	Transformer - Control	46-42515-04	46-42515-04	46-42515-04	46-42515-04	
57b	Stk	Transformer - Power Step Down	46-23585-01 (3)	46-23585-01 (4)	46-23585-01 (4)	46-23585-01 (4)	
58a		Terminal Block - Double Row	45-42548-02	45-42548-02	45-42548-02	45-42548-02	
58b		Terminal Block	45-21134-04	45-21134-04	45-21134-04	45-21134-04	
58c		Ground Lug	45-19000-02	45-19000-02	45-19000-02	45-19000-02	
59	Stk	Contactor - Blower	42-102664-08	42-102664-08	42-102664-08	42-102664-08	
60		Run Capacitor	See Fan Group				
		High Pressure Control	See Coil Group				
		Low Pressure Control	See Coil Group				
61		Integrated Furnace Control	See Gas Controls				
62a	Stk	Compressor #1 Contactor	42-102664-12	42-102664-12	42-102664-26	42-22464-04	
62b	Stk	Compressor #2 Contactor	42-102664-12	42-22464-04	42-102664-12	42-22464-04	
		WIRING HARNESSES:					
		Wiring Harness - Motor #1	See Fan Group				
		Wiring Harness - Motor #2	See Fan Group				
		Plug Harness - Compressor	See Compressor Group				
		Bypass Plug - Economizer 12 Pin	AS-61997-55	AS-61997-55	45-61997-55	AS-61997-55	
		Wiring Harness - Induced Draft Blower (25E)	N/A	N/A	N/A	N/A	
		Wiring Harness - Induced Draft Blower (35E)	45-42522-86	N/A	N/A	45-42522-86	
		Wiring Harness - Induced Draft Blower (40E)	N/A	45-42522-90	45-42522-90	45-42522-90	
		Wiring Harness - Economizer (12 pin to 9 pin)	45-42522-89	45-42522-89	45-42522-89	45-42522-89	
		Wiring Harness - Furnace Control	45-42522-88	45-42522-88	45-42522-88	45-42522-88	
		High/Low Pressure Switch Assembly (Includes both Switches and Wiring Harness)	See Coil Group				

No.	Notes	MODEL TECHNICAL VARIATION COOLING CAPACITY ELECTRICAL DESIGNATION	RKNL- B 072 C	RKNL- B 073 C	RKNL- B 085 C	RKNL- B 090 C	RKNL- B 102 C
		FAN GROUP					
52	Stk	Fan Motor (2)	51-42534-24	51-42534-24	51-42534-24	51-42534-24	51-42534-24
		Wiring Harness - Motor #1	45-102706-01	45-102706-01	45-102706-01	45-102706-01	45-102706-01
		Wiring Harness - Motor #2	45-102706-02	45-102706-02	45-102706-02	45-102706-02	45-102706-02
53	Stk	Fan Blade (2)	70-42572-04	70-42572-04	70-42572-04	70-42572-04	70-42572-04
60	Stk	Capacitor - Fan Motor (2)	43-100496-12	43-100496-12	43-100496-12	43-100496-12	43-100496-12

No.	Notes	MODEL TECHNICAL VARIATION COOLING CAPACITY ELECTRICAL DESIGNATION	RKNL- B 120 C	RKNL- B 150 C	RKNL- B 151 C		
		FAN GROUP					
52	Stk	Fan Motor (2)	51-42534-24	51-42534-29	51-42534-29		
		Wiring Harness - Motor #1 (before F4112)	45-102706-01	45-102706-03	45-102706-03		
		Wiring Harness - Motor #1 (on or after F4112)	45-102706-01	45-102706-03	45-102706-24		
		Wiring Harness - Motor #2 (before F4112)	45-102706-02	45-102706-04	45-102706-04		
		Wiring Harness - Motor #2 (on or after F4112)	45-102706-02	45-102706-04	45-102706-27		
53	Stk	Fan Blade (2)	70-42572-04	70-42502-03	70-103693-01		
60	Stk	Capacitor - Fan Motor (2)	43-100496-12	43-100496-17	43-100496-17		

No.	Notes	MODEL TECHNICAL VARIATION COOLING CAPACITY ELECTRICAL DESIGNATION	RKNL- B 072 D	RKNL- B 073 D	RKNL- B 085 D	RKNL- B 090 D	RKNL- B 102 D
		FAN GROUP					
52	Stk	Fan Motor (2)	51-42534-25	51-42534-25	51-42534-25	51-42534-25	51-42534-25
		Wiring Harness - Motor #1	45-102706-01	45-102706-01	45-102706-01	45-102706-01	45-102706-01
		Wiring Harness - Motor #2	45-102706-02	45-102706-02	45-102706-02	45-102706-02	45-102706-02
53	Stk	Fan Blade (2)	70-42572-04	70-42572-04	70-42572-04	70-42572-04	70-42572-04
60	Stk	Capacitor - Fan Motor (2)	43-100496-12	43-100496-12	43-100496-12	43-100496-12	43-100496-12

No.	Notes	MODEL TECHNICAL VARIATION COOLING CAPACITY ELECTRICAL DESIGNATION	RKNL- B 120 D	RKNL- B 150 D	RKNL- B 151 D		
		FAN GROUP					
52	Stk	Fan Motor (2)	51-42534-25	51-42534-28	51-42534-28		
		Wiring Harness - Motor #1 (before F4112)	45-102706-01	45-102706-03	45-102706-03		
		Wiring Harness - Motor #1 (on or after F4112)	45-102706-01	45-102706-03	45-102706-24		
		Wiring Harness - Motor #2 (before F4112)	45-102706-02	45-102706-04	45-102706-04		
		Wiring Harness - Motor #2 (on or after F4112)	45-102706-02	45-102706-04	45-102706-27		
53	Stk	Fan Blade (2)	70-42572-04	70-42502-03	70-103693-01		
60	Stk	Capacitor - Fan Motor (2)	43-100496-12	43-100496-12	43-100496-12		

No.	Notes	MODEL TECHNICAL VARIATION COOLING CAPACITY ELECTRICAL DESIGNATION	RKNL- B 072 Y	RKNL- B 073 Y	RKNL- B 085 Y	RKNL- B 090 Y	RKNL- B 102 Y
		FAN GROUP					
52	Stk	Fan Motor (2)	51-42534-26	51-42534-26	51-42534-26	51-42534-26	51-42534-26
		Wiring Harness - Motor #1	45-102706-01	45-102706-01	45-102706-01	45-102706-01	45-102706-01
		Wiring Harness - Motor #2	45-102706-02	45-102706-02	45-102706-02	45-102706-02	45-102706-02
53	Stk	Fan Blade (2)	70-42572-04	70-42572-04	70-42572-04	70-42572-04	70-42572-04
60	Stk	Capacitor - Fan Motor (2)	43-100496-12	43-100496-12	43-100496-12	43-100496-12	43-100496-12

No.	Notes	MODEL TECHNICAL VARIATION COOLING CAPACITY ELECTRICAL DESIGNATION	RKNL- B 120 Y	RKNL- B 150 Y	RKNL- B 151 Y		
		FAN GROUP					
52	Stk	Fan Motor (2)	51-42534-26	51-42534-27	51-42534-27		
		Wiring Harness - Motor #1 (before F4112)	45-102706-01	45-102706-03	45-102706-03		
		Wiring Harness - Motor #1 (on or after F4112)	45-102706-01	45-102706-03	45-102706-24		
		Wiring Harness - Motor #2 (before F4112)	45-102706-02	45-102706-04	45-102706-04		
		Wiring Harness - Motor #2 (on or after F4112)	45-102706-02	45-102706-04	45-102706-27		
53	Stk	Fan Blade (2)	70-42572-04	70-42502-03	70-103693-01		
60	Stk	Capacitor - Fan Motor (2)	43-100496-12	43-100496-48	43-100496-48		

No.	Notes	MODEL TECHNICAL VARIATION COOLING CAPACITY ELECTRICAL DESIGNATION	RKNL- B 180/210 C	RKNL- B 240 C	RKNL- B 241 C	RKNL- B 300 C	
		FAN GROUP					
52	Stk	Fan Motor	51-42534-24 (4)	51-42534-24 (6)	51-42534-24 (6)	51-42534-24 (6)	
		Wiring Harness - Motor #1 & #4	45-42522-71	45-42522-71	45-42522-71	45-42522-71	
		Wiring Harness - Motor #2 & #5	N/A	45-42522-70	45-42522-70	45-42522-70	
		Wiring Harness - Motor #3 & #6	45-42522-69	45-42522-69	45-42522-69	45-42522-69	
53	Stk	Fan Blade	70-42572-04 (4)	70-42572-04 (6)	70-42572-04 (6)	70-42572-04 (6)	
60	Stk	Capacitor - Fan Motor	43-100496-12 (4)	43-100496-12 (6)	43-100496-12 (6)	43-100496-12 (6)	

No.	Notes	MODEL TECHNICAL VARIATION COOLING CAPACITY ELECTRICAL DESIGNATION	RKNL- B 180/210 D	RKNL- B 240 D	RKNL- B 241 D	RKNL- B 300 D	
		FAN GROUP					
52	Stk	Fan Motor	51-42534-25 (4)	51-42534-25 (6)	51-42534-25 (6)	51-42534-25 (6)	
		Wiring Harness - Motor #1 & #4	45-42522-71	45-42522-71	45-42522-71	45-42522-71	
		Wiring Harness - Motor #2 & #5	N/A	45-42522-70	45-42522-70	45-42522-70	
		Wiring Harness - Motor #3 & #6	45-42522-69	45-42522-69	45-42522-69	45-42522-69	
53	Stk	Fan Blade	70-42572-04 (4)	70-42572-04 (6)	70-42572-04 (6)	70-42572-04 (6)	
60	Stk	Capacitor - Fan Motor	43-100496-12 (4)	43-100496-12 (6)	43-100496-12 (6)	43-100496-12 (6)	

No.	Notes	MODEL TECHNICAL VARIATION COOLING CAPACITY ELECTRICAL DESIGNATION	RKNL- B 180/210 Y	RKNL- B 240 Y	RKNL- B 241 Y	RKNL- B 300 Y	
		FAN GROUP					
52	Stk	Fan Motor	51-42534-26 (4)	51-42534-26 (6)	51-42534-26 (6)	51-42534-26 (6)	
		Wiring Harness - Motor #1 & #4	45-42522-71	45-42522-71	45-42522-71	45-42522-71	
		Wiring Harness - Motor #2 & #5	N/A	45-42522-70	45-42522-70	45-42522-70	
		Wiring Harness - Motor #3 & #6	45-42522-69	45-42522-69	45-42522-69	45-42522-69	
53	Stk	Fan Blade	70-42572-04 (4)	70-42572-04 (6)	70-42572-04 (6)	70-42572-04 (6)	
60	Stk	Capacitor - Fan Motor	43-100496-12 (4)	43-100496-12 (6)	43-100496-12 (6)	43-100496-12 (6)	

No.	Notes	MODEL TECHNICAL VARIATION COOLING CAPACITY DRIVE PACKAGE	RKNL- B 072 L	RKNL- B 073 L	RKNL- B 085 L	RKNL- B 090 L	
		BLOWER ASSEMBLY GROUP - BELT DRIVE					
64	Stk	Blower Assembly (w/o Motor Mount, Belt, Fixed Sheave, and Key)	AS-102711-02	AS-102711-02	AS-90757-01	AS-90757-01	
65	Stk	Blower Wheel	70-21773-01	70-21773-01	70-42540-02	70-42540-02	
66		Bearing Frame Tri-Arm (2)	70-41723-02	70-41723-02	70-42540-05	70-42540-05	
67		Bearing with Bearing Lock (2)	70-41911-01	70-41911-01	70-41854-02	70-41854-02	
68	Stk	Blower Shaft	70-21933-02	70-21933-02	70-42540-04	70-42540-04	
69		Blower Mounting Angles (2)	AE-90708-01	AE-90708-01	AE-90708-01	AE-90708-01	
		Blower Angle Stop	AE-90709-02	AE-90709-02	AE-90709-02	AE-90709-02	
70		Motor Mount	AE-90710-05	AE-90710-05	AS-90824-01	AS-90824-01	
71	Stk	Blower Motor - C/D Voltages	51-41936-03	51-41936-03	51-42536-01	51-42536-01	
71	Stk	Blower Motor - Y Voltage	51-41936-04	51-41936-04	51-42536-02	51-42536-02	
72	Stk	Variable Sheave	71-40427-29	71-40427-29	71-42538-02	71-42538-02	
73	Stk	Belt	71-40235-46	71-40235-46	71-40438-30	71-40438-30	
74	Stk	Fixed Sheave	71-100772-03	71-100772-03	71-100774-05	71-100774-05	
		Key	94-22030-01	94-22030-01	94-42551-09	94-42551-09	
	Stk	Bushing for Sheave w/Screws	N/A	N/A	71-100773-01	71-100773-01	

No.	Notes	MODEL TECHNICAL VARIATION COOLING CAPACITY DRIVE PACKAGE	RKNL- B 102 L	RKNL- B 120 L	RKNL- B 150 L	RKNL- B 151 L	
		BLOWER ASSEMBLY GROUP - BELT DRIVE					
64	Stk	Blower Assembly (w/o Motor Mount, Belt, Fixed Sheave, and Key)	AS-90757-01	AS-90757-01	AS-90757-01	AS-90757-01	
65	Stk	Blower Wheel	70-42540-02	70-42540-02	70-42540-02	70-42540-02	
66		Bearing Frame Tri-Arm (2)	70-42540-05	70-42540-05	70-42540-05	70-42540-05	
67		Bearing with Bearing Lock (2)	70-41854-02	70-41854-02	70-41854-02	70-41854-02	
68	Stk	Blower Shaft	70-42540-04	70-42540-04	70-42540-04	70-42540-04	
69		Blower Mounting Angles (2)	AE-90708-01	AE-90708-01	AE-90708-01	AE-90708-01	
		Blower Angle Stop	AE-90709-02	AE-90709-02	AE-90709-02	AE-90709-02	
70		Motor Mount	AS-90824-01	AS-90824-01	AS-90824-01	AS-90824-01	
71	Stk	Blower Motor - C/D Voltages	51-42536-01	51-42536-01	51-42537-01	51-42537-01	
71	Stk	Blower Motor - Y Voltage	51-42536-02	51-42536-02	51-42537-02	51-42537-02	
72	Stk	Variable Sheave	71-42538-02	71-42538-02	71-42538-02	71-42538-02	
73	Stk	Belt	71-40438-27	71-40438-27	71-40438-23	71-40438-23	
74	Stk	Fixed Sheave	71-100774-02	71-100774-02	71-100774-01	71-100774-01	
		Key	94-42551-09	94-42551-09	94-42551-09	94-42551-09	
	Stk	Bushing for Sheave w/Screws	71-100773-01	71-100773-01	71-100773-01	71-100773-01	

No.	Notes	MODEL TECHNICAL VARIATION COOLING CAPACITY DRIVE PACKAGE	RKNL- B 085 N	RKNL- B 090 N			
		BLOWER ASSEMBLY GROUP - BELT DRIVE					
64	Stk	Blower Assembly (w/o Motor Mount, Belt, Fixed Sheave, and Key)	AS-90757-01	AS-90757-01			
65	Stk	Blower Wheel	70-42540-02	70-42540-02			
66		Bearing Frame Tri-Arm (2)	70-42540-05	70-42540-05			
67		Bearing with Bearing Lock (2)	70-41854-02	70-41854-02			
68	Stk	Blower Shaft	70-42540-04	70-42540-04			
69		Blower Mounting Angles (2)	AE-90708-01	AE-90708-01			
		Blower Angle Stop	AE-90709-02	AE-90709-02			
70		Motor Mount	AE-90710-04	AE-90710-04			
71	Stk	Blower Motor - C/D Voltages	51-42537-01	51-42537-01			
71	Stk	Blower Motor - Y Voltage	51-42537-02	51-42537-02			
72	Stk	Variable Sheave	71-42538-02	71-42538-02			
73	Stk	Belt	71-40438-23	71-40438-23			
74	Stk	Fixed Sheave	71-100774-04	71-100774-04			
		Key	94-42551-09	94-42551-09			
	Stk	Bushing for Sheave w/Screws	71-100773-01	71-100773-01			

No.	Notes	MODEL TECHNICAL VARIATION COOLING CAPACITY DRIVE PACKAGE	RKNL- B 072 M	RKNL- B 073 M	RKNL- B 085 M	RKNL- B 090 M	
		BLOWER ASSEMBLY GROUP - BELT DRIVE					
64	Stk	Blower Assembly (w/o Motor Mount, Belt, Fixed Sheave, and Key)	AS-102711-02	AS-102711-02	AS-90757-01	AS-90757-01	
65	Stk	Blower Wheel	70-21773-01	70-21773-01	70-42540-02	70-42540-02	
66		Bearing Frame Tri-Arm (2)	70-41723-02	70-41723-02	70-42540-05	70-42540-05	
67		Bearing with Bearing Lock (2)	70-41911-01	70-41911-01	70-41854-02	70-41854-02	
68	Stk	Blower Shaft	70-21933-02	70-21933-02	70-42540-04	70-42540-04	
69		Blower Mounting Angles (2)	AE-90708-01	AE-90708-01	AE-90708-01	AE-90708-01	
		Blower Angle Stop	AE-90709-02	AE-90709-02	AE-90709-02	AE-90709-02	
70		Motor Mount	AE-90710-05	AE-90710-05	AE-90710-04	AE-90710-04	
71	Stk	Blower Motor - C/D Voltages	51-41936-03	51-41936-03	51-42536-01	51-42536-01	
71	Stk	Blower Motor - Y Voltage	51-41936-04	51-41936-04	51-42536-02	51-42536-02	
72	Stk	Variable Sheave	71-40427-25	71-40427-25	71-42538-02	71-42538-02	
73	Stk	Belt	71-40235-48	71-40235-48	71-40438-27	71-40438-27	
74	Stk	Fixed Sheave	71-100772-03	71-100772-03	71-100774-02	71-100774-02	
		Key	94-22030-01	94-22030-01	94-42551-09	94-42551-09	
	Stk	Bushing for Sheave w/Screws	N/A	N/A	71-100773-01	71-100773-01	

No.	Notes	MODEL TECHNICAL VARIATION COOLING CAPACITY DRIVE PACKAGE	RKNL- B 102 M	RKNL- B 120 M	RKNL- B 150 M	RKNL- B 151 M	
		BLOWER ASSEMBLY GROUP - BELT DRIVE					
64	Stk	Blower Assembly (w/o Motor Mount, Belt, Fixed Sheave, and Key)	AS-90757-01	AS-90757-01	AS-90757-01	AS-90757-01	
65	Stk	Blower Wheel	70-42540-02	70-42540-02	70-42540-02	70-42540-02	
66		Bearing Frame Tri-Arm (2)	70-42540-05	70-42540-05	70-42540-05	70-42540-05	
67		Bearing with Bearing Lock (2)	70-41854-02	70-41854-02	70-41854-02	70-41854-02	
68	Stk	Blower Shaft	70-42540-04	70-42540-04	70-42540-04	70-42540-04	
69		Blower Mounting Angles (2)	AE-90708-01	AE-90708-01	AE-90708-01	AE-90708-01	
		Blower Angle Stop	AE-90709-02	AE-90709-02	AE-90709-02	AE-90709-02	
70		Motor Mount	AE-90710-04	AE-90710-04	AE-90710-04	AE-90710-04	
71	Stk	Blower Motor - C/D Voltages	51-42537-01	51-42537-01	51-42498-07	51-102826-06	
71	Stk	Blower Motor - Y Voltage	51-42537-02	51-42537-02	51-42574-01	51-102826-08	
72	Stk	Variable Sheave	71-42538-02	71-42538-02	71-40427-11	71-40427-11	
73	Stk	Belt	71-40438-23	71-40438-23	71-40438-31	71-40438-31	
74	Stk	Fixed Sheave	71-100774-04	71-100774-04	71-26254-06	71-26254-06	
		Key	94-42551-09	94-42551-09	94-42551-09	94-42551-09	
	Stk	Bushing for Sheave w/Screws	71-100773-01	71-100773-01	71-100773-01	71-100773-01	

No.	Notes	MODEL TECHNICAL VARIATION COOLING CAPACITY DRIVE PACKAGE	RKNL- B 180 L	RKNL- B 210 L	RKNL- B 240 L	RKNL- B 241 L	RKNL- B 300 L
		BLOWER ASSEMBLY GROUP - BELT DRIVE					
64	Stk	Blower Assembly (includes Bearing Frame and Blower Wheel) (2)	AS-90757-06	AS-90757-06	AS-90757-06	AS-90757-06	AS-90757-06
65	Stk	Blower Wheel (2)	70-42564-02	70-42564-02	70-42564-02	70-42564-02	70-42564-02
66		Bearing Frame Tri-Arm (4)	70-42284-04	70-42284-04	70-42284-04	70-42284-04	70-42284-04
67		Bearing with Bearing Lock (4)	70-41854-02	70-41854-02	70-41854-02	70-41854-02	70-41854-02
68	Stk	Blower Shaft	70-42564-03	70-42564-03	70-42564-03	70-42564-03	70-42564-03
69		Blower Connector Angles (3)	AE-90798-01	AE-90798-01	AE-90798-01	AE-90798-01	AE-90798-01
70		Motor Mount	AE-90710-03	AE-90710-03	AE-90710-03	AE-90710-03	AE-90710-03
71	Stk	Blower Motor - C/D Voltages	51-42537-01	51-42537-01	51-102826-01	51-102826-06	51-102826-02
71	Stk	Blower Motor - Y Voltage	51-42537-02	51-42537-02	51-42574-01	51-102826-08	51-102826-04
72	Stk	Variable Sheave	71-42538-02	71-42538-02	71-40427-04	71-104625-11	71-40427-59
73	Stk	Belt	71-40438-43	71-40438-42	71-40438-51	71-40438-50	71-40438-54
74a	Stk	Fixed Sheave	71-100774-08	71-100774-09	71-100774-06	71-104629-02	71-100774-06
74b		Key	94-42551-09	94-42551-09	94-42551-09	94-42551-09	94-42551-09
74c	Stk	Bushing for Sheave w/Screws	71-100773-01	71-100773-01	71-100773-01	71-104629-02	71-100773-01

No.	Notes	MODEL TECHNICAL VARIATION COOLING CAPACITY DRIVE PACKAGE	RKNL- B 180 M	RKNL- B 210 M	RKNL- B 240 M	RKNL- B 241 M	RKNL- B 300 M
		BLOWER ASSEMBLY GROUP - BELT DRIVE					
64	Stk	Blower Assembly (includes Bearing Frame and Blower Wheel) (2)	AS-90757-06	AS-90757-06	AS-90757-06	AS-90757-06	AS-90757-06
65	Stk	Blower Wheel (2)	70-42564-02	70-42564-02	70-42564-02	70-42564-02	70-42564-02
66		Bearing Frame Tri-Arm (4)	70-42284-04	70-42284-04	70-42284-04	70-42284-04	70-42284-04
67		Bearing with Bearing Lock (4)	70-41854-02	70-41854-02	70-41854-02	70-41854-02	70-41854-02
68	Stk	Blower Shaft	70-42564-03	70-42564-03	70-42564-03	70-42564-03	70-42564-03
69		Blower Connector Angles (3)	AE-90798-01	AE-90798-01	AE-90798-01	AE-90798-01	AE-90798-01
70		Motor Mount	AE-90710-03	AE-90710-03	AE-90710-03	AE-90710-03	AE-90710-03
71	Stk	Blower Motor - C/D Voltages	51-102826-01	51-102826-01	51-102826-02	51-102826-07	51-102826-03
71	Stk	Blower Motor - Y Voltage	51-42574-01	51-42574-01	51-102826-04	51-102826-09	51-102826-05
72	Stk	Variable Sheave	71-40427-04	71-40427-04	71-40427-59	71-104625-14	71-40427-60
73	Stk	Belt	71-40438-46	71-40438-46	71-40438-54	71-40438-54	71-102847-01
74a	Stk	Fixed Sheave	71-100774-08	71-100774-08	71-100774-06	71-104627-17	71-100774-07
74b		Key	94-42551-09	94-42551-09	94-42551-09	94-42551-09	94-42551-09
74c	Stk	Bushing for Sheave w/Screws	71-100773-01	71-100773-01	71-100773-01	71-104629-02	71-100773-01

No.	Notes	MODEL TECHNICAL VARIATION COOLING CAPACITY	RKNL- B 072	RKNL- B 073	RKNL- B 085	RKNL- B 090	
		COIL GROUP					
		EVAPORATOR COIL GROUP:					
42	Stk	Evaporator Coil	AS-90656-70	AS-90656-88	AS-90656-76	AS-90656-68	
	Stk	Distributor / Flowcheck Piston Assembly	61-102809-94	N/A	61-102912-98	N/A	
	Stk	Flowcheck Piston Kit	61-25414-94	N/A	N/A	N/A	
	Stk	Flowcheck Distributor	61-26113-35	N/A	N/A	N/A	
	Stk	TXV - Circuit #1 (Before Date Code Fxxxx indicated)	N/A	61-101351-13 (F0514)	N/A	61-101351-11 (F1114)	
	Stk	TXV - Circuit #1 (On or After Date Code Fxxxx indicated)	N/A	61-42662-19 (F0514)	N/A	61-42662-20 (F1114)	
	Stk	TXV - Circuit #2 (Before Date Code Fxxxx indicated)	N/A	N/A	N/A	61-101351-11 (F1114)	
	Stk	TXV - Circuit #2 (On or After Date Code Fxxxx indicated)	N/A	N/A	N/A	61-42662-20 (F1114)	
		Bulb Strap Kit - TXV (2)	N/A	N/A	N/A	64-101357-01	
43	Stk	Drain Pan - Removable	68-102699-02	68-102699-02	68-102699-02	68-102699-02	
		FILTER PIECES:					
44		Filter Frame	AE-90606-11	AE-90606-11	AE-90606-11	AE-90606-11	
45		Air Stop - Bottom	AE-102712-10	AE-102712-10	AE-102712-10	AE-102712-10	
46		Air Stop - Side	AE-102712-06	AE-102712-06	AE-102712-06	AE-102712-06	
47		Top Air Stop Assembly	AS-90604-06	AS-90604-06	AS-90604-06	AS-90604-06	
48		Filter Channel (2)	AE-102712-08	AE-102712-08	AE-102712-08	AE-102712-08	
49		Filter Slide (2)	AE-102712-11	AE-102712-11	AE-102712-11	AE-102712-11	
		Filter (6)	54-42541-01	54-42541-01	54-42541-01	54-42541-01	
		CONDENSER COIL GROUP:					
37a	Stk	Condenser Coil	AS-102704-03	AS-102704-03	AS-102704-03	AS-102704-03	
37b	Stk	Condenser Coil	N/A	N/A	AS-102839-03	AS-102704-03	
38		Front Air Stop	N/A	N/A	AE-90706-19	AE-90706-19	
39		Rear Air Stop	N/A	N/A	AE-90706-18	AE-90706-18	
40a ,b		Bottom Retainer (2)	N/A	N/A	N/A	AE-90700-03	
40a		Micro-Channel Coil Mounting Base - Left	N/A	N/A	N/A	N/A	
40b		Micro-Channel Coil Mounting Base - Right	N/A	N/A	N/A	N/A	
41a		Top Support - Condenser Coil	N/A	N/A	AE-90612-09	AE-90612-09	
41b		Top Support - Condenser Bulkhead	N/A	N/A	AE-90612-19	AE-90612-03	
		Filter Drier - Liquid Line	83-22755-05 (1)	83-22755-10 (1)	83-40386-05 (1)	83-22755-05 (2)	
		Strap - Filter Drier	N/A	N/A	N/A	AE-102132-01 (2)	
	Stk	High Pressure Control	47-23699-05 (1)	47-23699-05 (1)	47-23699-05 (1)	47-23699-05 (2)	
	Stk	Low Pressure Control - Before F2710	47-101529-05 (1)	N/A	47-101529-05 (1)	47-101529-05 (2)	
	Stk	Low Pressure Control - After F2710	47-101529-09 (1)	47-101529-09 (1)	47-101529-09 (1)	47-101529-09 (2)	
		High/Low Pressure Control Assembly (Includes both controls and Wiring Harness)	AS-102877-01 (1)	AS-102877-01 (1)	AS-102877-01 (1)	AS-102877-01 (2)	

No.	Notes	MODEL TECHNICAL VARIATION COOLING CAPACITY	RKNL- B 102	RKNL- B 120	RKNL- B 150	RKNL- B 151	
		COIL GROUP					
		EVAPORATOR COIL GROUP:					
42	Stk	Evaporator Coil	AS-90656-77	AS-90656-69	AS-90656-75	AS-90656-75	
	Stk	Distributor / Flowcheck Piston Assembly	N/A	N/A	N/A	N/A	
	Stk	Flowcheck Piston Kit	N/A	N/A	N/A	N/A	
	Stk	Flowcheck Distributor	N/A	N/A	N/A	N/A	
	Stk	TXV - Circuit #1 (Before Date Code Fxxxx indicated)	61-101351-12 (F1514)	61-101351-13 (F0514)	61-101351-14	61-101351-14	
	Stk	TXV - Circuit #1 (On or After Date Code Fxxxx indicated)	61-42662-18 (F1514)	61-42662-19 (F0514)	61-101351-14	61-101351-14	
	Stk	TXV - Circuit #2 (Before Date Code Fxxxx indicated)	61-101351-12 (F1514)	61-101351-13 (F0514)	61-101351-14	61-101351-14	
	Stk	TXV - Circuit #2 (On or After Date Code Fxxxx indicated)	61-42662-18 (F1514)	61-42662-19 (F0514)	61-101351-14	61-101351-14	
		Bulb Strap Kit - TXV (2)	64-101357-01	64-101357-01	64-101357-01	64-101357-01	
43	Stk	Drain Pan - Removable	68-102699-02	68-102699-02	68-102699-02	68-102699-02	
		FILTER PIECES:					
44		Filter Frame	AE-90606-11	AE-90606-11	AE-90606-11	AE-90606-11	
45		Air Stop - Bottom	AE-102712-10	AE-102712-10	AE-102712-10	AE-102712-10	
46		Air Stop - Side	AE-102712-06	AE-102712-06	AE-102712-06	AE-102712-06	
47		Top Air Stop Assembly	AS-90604-06	AS-90604-06	AS-90604-06	AS-90604-06	
48		Filter Channel (2)	AE-102712-08	AE-102712-08	AE-102712-08	AE-102712-08	
49		Filter Slide (2)	AE-102712-11	AE-102712-11	AE-102712-11	AE-102712-11	
		Filter (6)	54-42541-01	54-42541-01	54-42541-01	54-42541-01	
		CONDENSER COIL GROUP:					
37a	Stk	Condenser Coil	AS-90656-25	AS-90656-42	65-101478-01	65-101478-08	
37b	Stk	Condenser Coil	AS-90656-25	AS-90656-42	65-101478-01	65-101478-08	
38		Front Air Stop	AE-90706-19	AE-90706-19	N/A	N/A	
39		Rear Air Stop	AE-90706-18	AE-90706-18	N/A	N/A	
40a ,b		Bottom Retainer (2)	AE-90700-02	AE-90700-02	N/A	N/A	
40a		Micro-Channel Coil Mounting Base - Left	N/A	N/A	68-102752-01	68-102752-01	
40b		Micro-Channel Coil Mounting Base - Right	N/A	N/A	68-102752-02	68-102752-02	
41a		Top Support - Condenser Coil	AE-90612-02	AE-90612-02	AE-90612-13	AE-90612-13	
41b		Top Support - Condenser Bulkhead	AE-90612-03	AE-90612-03	AE-90612-05	AE-90612-05	
		Filter Drier - Liquid Line	83-22755-05 (2)	83-22755-05 (2)	83-22755-05 (2)	83-22755-05 (2)	
		Strap - Filter Drier	AE-102132-01 (2)	AE-102132-01 (2)	AE-102132-01 (2)	AE-102132-01 (2)	
	Stk	High Pressure Control - Before F4112	47-23699-05 (2)	47-23699-05 (2)	47-23699-05 (2)	47-23699-05 (2)	
		High Pressure Control - On or After F4112	47-23699-05 (2)	47-23699-05 (2)	47-23699-05 (2)	47-103669-01 (2)	
	Stk	Low Pressure Control - Before F2710	47-101529-05 (2)	47-101529-05 (2)	47-101529-05 (2)	47-101529-09 (2)	
	Stk	Low Pressure Control - After F2710	47-101529-09 (2)	47-101529-09 (2)	47-101529-09 (2)	47-101529-09 (2)	
		High/Low Pressure Control Assembly (Includes both controls and Wiring Harness)	AS-102877-01 (2)	AS-102877-01 (2)	AS-102877-01 (2)	AS-102877-01 (2)	

No.	Notes	MODEL TECHNICAL VARIATION COOLING CAPACITY	RKNL- B 180	RKNL- B 210	RKNL- B 240	RKNL- B 241	RKNL- B 300
		COIL GROUP (Granite/Steel Gray, After F4411)					
		EVAPORATOR COIL GROUP:					
40		Air Flow Panel	AS-90828-02H	AS-90828-02H	AS-90828-02H	AE-90828-02HT	AS-90828-02H
42	Stk	Complete Coil - Indoor	AS-102821-03	AS-102821-03	AS-102652-03	AS-104258-03	AS-102428-03
	Stk	TXV/Distributor Assembly - Circuit #1	61-102845-01	61-102845-01	61-102687-01	61-102815-01	61-102815-01
	Stk	TXV/Distributor Assembly - Circuit #2	61-102845-01	61-102845-01	61-102687-01	61-102815-01	61-102815-01
43	Stk	Drain Pan - Removable	68-102699-01	68-102699-01	68-102699-01	68-102699-01	68-102699-01
		FILTER PIECES:					
44		Filter Frame	AE-90606-10	AE-90606-10	AE-90606-10	AE-90606-10	AE-90606-10
45		Air Stop - Bottom	AE-102712-17	AE-102712-17	AE-102712-17	AE-102712-17	AE-102712-17
46		Air Stop - Side	AE-102712-14	AE-102712-14	AE-102712-14	AE-102712-14	AE-102712-14
47		Top Air Stop Assembly	AS-90604-04	AS-90604-04	AS-90604-04	AS-90604-04	AS-90604-04
48		Filter Channel (2)	AE-102712-16	AE-102712-16	AE-102712-16	AE-102712-16	AE-102712-16
49		Filter Slide (2)	AE-102712-15	AE-102712-15	AE-102712-15	AE-102712-15	AE-102712-15
50		Filter - 20 in. x 25 in. x 2 in. (8)	54-42541-04	54-42541-04	54-42541-04	54-42541-04	54-42541-04
		CONDENSER COIL:					
37	Stk	Condenser Coil Assembly (2)	AS-102647-03	AS-103204-03	AS-102666-03	N/A	AS-102666-03
37	Stk	Micro Channel Coil (2)	N/A	N/A	N/A	65-101478-09	N/A
38a		Air Stop - Front	AE-90706-13	AE-90706-13	AE-90706-13	AE-90706-25	AE-90706-13
38b		Corner Brace - Top Front	AS-90706-16H	AS-90706-16H	AS-90706-16H	AE-90706-16HT	AS-90706-16H
38c		Post - Outdoor Coil (Front)	AS-90706-14H	AS-90706-14H	AS-90706-14H	AE-90706-22HT	AS-90706-14H
39a		Air Stop - Rear	AE-90706-12	AE-90706-12	AE-90706-12	AE-90706-24	AE-90706-12
39b		Corner Brace - Top Rear	AS-90706-17H	AS-90706-17H	AS-90706-17H	AE-90706-17HT	AS-90706-17H
39c		Post - Outdoor Coil (Rear)	AS-90706-15H	AS-90706-15H	AS-90706-15H	AE-90706-23HT	AS-90706-15H
41		Air Stop- Top Right	AS-90753-08H	AS-90753-08H	AS-90753-08H	AE-90753-08HT	AS-90753-08H
41a		Top Support - Inner Condenser Coil (2)	AE-90612-21	AE-90612-08	AE-90612-08	AE-90612-28	AE-90612-08
41b		Top Support - Outer Condenser Coil	AE-90612-20	AE-90612-11	AE-90612-11	AE-90612-20	AE-90612-11
41c		Top Support - Condenser Bulkhead	AE-90612-18	AE-90612-06	AE-90612-06	AE-90612-27	AE-90612-06
		Filter Drier - Liquid Line (2)	83-22755-11	83-22755-11	83-22755-11	83-22755-19	83-22755-11
	Stk	High Pressure Control	47-23699-05	47-23699-05	47-23699-05	47-23699-04	47-23699-05
	Stk	Low Pressure Control	47-101529-09	47-101529-09	47-101529-09	47-101529-09	47-101529-09
		High/Low Pressure Control Assembly (Includes both controls and Wiring Harness)	AS-102877-01 (2)	AS-102877-01 (2)	AS-102877-01 (2)	N/A	AS-102877-01 (2)

No.	Notes	MODEL TECHNICAL VARIATION COOLING CAPACITY	RKNL- B 180	RKNL- B 210	RKNL- B 240	RKNL- B 300	
		COIL GROUP (Neutra Green, Before F4411)					
		EVAPORATOR COIL GROUP:					
40		Air Flow Panel	AS-90828-02A	AS-90828-02A	AS-90828-02A	AS-90828-02A	
42	Stk	Complete Coil - Indoor	AS-102821-03	AS-102821-03	AS-102652-03	AS-102428-03	
	Stk	TXV/Distributor Assembly - Circuit #1	61-102845-01	61-102845-01	61-102687-01	61-102815-01	
	Stk	TXV/Distributor Assembly - Circuit #2	61-102845-01	61-102845-01	61-102687-01	61-102815-01	
43	Stk	Drain Pan - Removable	68-102699-01	68-102699-01	68-102699-01	68-102699-01	
		FILTER PIECES:					
44		Filter Frame	AE-90606-10	AE-90606-10	AE-90606-10	AE-90606-10	
45		Air Stop - Bottom (Before F1811)	AE-102712-05	AE-102712-05	AE-102712-05	AE-102712-05	
45		Air Stop - Bottom (After F1811)	AE-102712-17	AE-102712-17	AE-102712-17	AE-102712-17	
46		Air Stop - Side (Before F1811)	AE-102712-01	AE-102712-01	AE-102712-01	AE-102712-01	
46		Air Stop - Side (After F1811)	AE-102712-14	AE-102712-14	AE-102712-14	AE-102712-14	
47		Top Air Stop Assembly	AS-90604-04	AS-90604-04	AS-90604-04	AS-90604-04	
48		Filter Channel (2) (Before F1811)	AE-102712-03	AE-102712-03	AE-102712-03	AE-102712-03	
48		Filter Channel (2) (After F1811)	AE-102712-16	AE-102712-16	AE-102712-16	AE-102712-16	
49		Filter Slide (2) (Before F1811)	AE-102712-02	AE-102712-02	AE-102712-02	AE-102712-02	
49		Filter Slide (2) (After F1811)	AE-102712-15	AE-102712-15	AE-102712-15	AE-102712-15	
50		Filter - 20 in. x 25 in. x 2 in. (8)	54-42541-04	54-42541-04	54-42541-04	54-42541-04	
		CONDENSER COIL:					
37	Stk	Condenser Coil Assembly (2)	AS-102647-03	AS-103204-03	AS-102666-03	AS-102666-03	
38a		Air Stop - Front	AE-90706-13	AE-90706-13	AE-90706-13	AE-90706-13	
38b		Corner Brace - Top Front	AS-90706-16A	AS-90706-16A	AS-90706-16A	AS-90706-16A	
38c		Post - Outdoor Coil (Front)	AS-90706-14A	AS-90706-14A	AS-90706-14A	AS-90706-14A	
39a		Air Stop - Rear	AE-90706-12	AE-90706-12	AE-90706-12	AE-90706-12	
39b		Corner Brace - Top Rear	AS-90706-17A	AS-90706-17A	AS-90706-17A	AS-90706-17A	
39c		Post - Outdoor Coil (Rear)	AS-90706-15A	AS-90706-15A	AS-90706-15A	AS-90706-15A	
41		Air Stop- Top Right	AS-90753-08A	AS-90753-08A	AS-90753-08A	AS-90753-08A	
41a		Top Support - Inner Condenser Coil (2)	AE-90612-21	AE-90612-08	AE-90612-08	AE-90612-08	
41b		Top Support - Outer Condenser Coil	AE-90612-20	AE-90612-11	AE-90612-11	AE-90612-11	
41c		Top Support - Condenser Bulkhead	AE-90612-18	AE-90612-06	AE-90612-06	AE-90612-06	
		Filter Drier - Liquid Line (2)	83-22755-11	83-22755-11	83-22755-11	83-22755-11	
	Stk	High Pressure Control	47-23699-05	47-23699-05	47-23699-05	47-23699-05	
	Stk	Low Pressure Control - Before F2710	47-101529-05 (2)	47-101529-05 (2)	47-101529-05 (2)	47-101529-05 (2)	
	Stk	Low Pressure Control - After F2710	47-101529-09 (2)	47-101529-09 (2)	47-101529-09 (2)	47-101529-09 (2)	
		High/Low Pressure Switch Assembly (Includes both Switches and Wiring Harness)	AS-102877-01	AS-102877-01	AS-102877-01	AS-102877-01	

No.	Notes	MODEL TECHNICAL VARIATION COOLING CAPACITY ELECTRICAL DESIGNATION	RKNL- B 072 C	RKNL- B 073 C	RKNL- B 085 C	RKNL- B 090 C	RKNL- B 102 C
		COMPRESSOR GROUP					
		Compressor ID:	**7913**	**8592**	**7907**	**7867**	**7937**
75	Stk	Compressor #1	55-102045-37S	55-102471-21S	55-102045-43S	55-102045-08S	55-102045-34S
75	Stk	Compressor #2	N/A	N/A	N/A	55-102045-08S	55-102045-34S
	Stk	Crankcase Heater	44-17402-10	44-17402-10	44-17402-10	N/A	N/A
	Stk	Plug Harness - Compressor #1	45-102708-01	45-102708-01	45-102708-01	45-102708-01	45-102708-01
	Stk	Plug Harness - Compressor #2	N/A	N/A	N/A	45-102708-02	45-102708-02
		Compressor ID:					**8784**
75	Stk	Compressor #1					55-102045-93S
75	Stk	Compressor #2					55-102045-93S
	Stk	Crankcase Heater					N/A
	Stk	Plug Harness - Compressor #1					45-102708-01
	Stk	Plug Harness - Compressor #2					45-102708-02

No.	Notes	MODEL TECHNICAL VARIATION COOLING CAPACITY ELECTRICAL DESIGNATION	RKNL- B 120 C	RKNL- B 150 C	RKNL- B 151 C		
		COMPRESSOR GROUP					
		Compressor ID:	**7943**	**7870**	**8301**		
75	Stk	Compressor #1	55-102045-27S	55-102471-18S	55-102471-18S		
75	Stk	Compressor #2	55-102045-27S	55-102471-14S	55-102471-14S		
	Stk	Crankcase Heater	N/A	N/A	N/A		
	Stk	Plug Harness - Compressor #1	45-102708-01	45-102708-03	45-102708-03		
	Stk	Plug Harness - Compressor #2	45-102708-02	45-102708-04	45-102708-04		

No.	Notes	MODEL TECHNICAL VARIATION COOLING CAPACITY ELECTRICAL DESIGNATION	RKNL- B 072 D	RKNL- B 073 D	RKNL- B 085 D	RKNL- B 090 D	RKNL- B 102 D
		COMPRESSOR GROUP					
		Compressor ID:	**7914**	**8593**	**7908**	**7868**	**7938**
75	Stk	Compressor #1	55-102045-38S	55-102471-22S	55-102045-45S	55-102045-07S	55-102045-35S
75	Stk	Compressor #2	N/A	N/A	N/A	55-102045-07S	55-102045-35S
	Stk	Crankcase Heater	44-17402-11	44-17402-11	44-17402-11	N/A	N/A
	Stk	Plug Harness - Compressor #1	45-102708-01	45-102708-01	45-102708-01	45-102708-01	45-102708-01
	Stk	Plug Harness - Compressor #2	N/A	N/A	N/A	45-102708-02	45-102708-02
		Compressor ID:					**8785**
75	Stk	Compressor #1					55-102045-94S
75	Stk	Compressor #2					55-102045-94S
	Stk	Crankcase Heater					N/A
	Stk	Plug Harness - Compressor #1					45-102708-01
	Stk	Plug Harness - Compressor #2					45-102708-02

No.	Notes	MODEL TECHNICAL VARIATION COOLING CAPACITY ELECTRICAL DESIGNATION	RKNL- B 120 D	RKNL- B 150 D	RKNL- B 151 D		
		COMPRESSOR GROUP					
		Compressor ID:	**7944**	**7871**	**8302**		
75	Stk	Compressor #1	55-102045-28S	55-102471-19S	55-102471-19S		
75	Stk	Compressor #2	55-102045-28S	55-102471-16S	55-102471-16S		
	Stk	Crankcase Heater	N/A	N/A	N/A		
	Stk	Plug Harness - Compressor #1	45-102708-01	45-102708-03	45-102708-03		
	Stk	Plug Harness - Compressor #2	45-102708-02	45-102708-04	45-102708-04		

No.	Notes	MODEL TECHNICAL VARIATION COOLING CAPACITY ELECTRICAL DESIGNATION	RKNL- B 072 Y	RKNL- B 073 Y	RKNL- B 085 Y	RKNL- B 090 Y	RKNL- B 102 Y
		COMPRESSOR GROUP					
		Compressor ID:	**7915**	**8594**	**7909**	**7869**	**7939**
75	Stk	Compressor #1	55-102045-39S	55-102471-23S	55-102045-44S	55-102045-42S	55-102045-36S
75	Stk	Compressor #2	N/A	N/A	N/A	55-102045-42S	55-102045-36S
	Stk	Crankcase Heater	44-17402-12	44-17402-12	44-17402-12	N/A	N/A
	Stk	Plug Harness - Compressor #1	45-102708-01	45-102708-01	45-102708-01	45-102708-01	45-102708-01
	Stk	Plug Harness - Compressor #2	N/A	N/A	N/A	45-102708-02	45-102708-02
		Compressor ID:					**8786**
75	Stk	Compressor #1					55-102045-95S
75	Stk	Compressor #2					55-102045-95S
	Stk	Crankcase Heater					N/A
	Stk	Plug Harness - Compressor #1					45-102708-01
	Stk	Plug Harness - Compressor #2					45-102708-02

No.	Notes	MODEL TECHNICAL VARIATION COOLING CAPACITY ELECTRICAL DESIGNATION	RKNL- B 120 Y	RKNL- B 150 Y	RKNL- B 151 Y		
		COMPRESSOR GROUP					
		Compressor ID:	**7945**	**7872**	**8303**		
75	Stk	Compressor #1	55-102045-41S	55-102471-17S	55-102471-17S		
75	Stk	Compressor #2	55-102045-41S	55-102471-15S	55-102471-15S		
	Stk	Crankcase Heater	N/A	N/A	N/A		
	Stk	Plug Harness - Compressor #1	45-102708-01	45-102708-03	45-102708-03		
	Stk	Plug Harness - Compressor #2	45-102708-02	45-102708-04	45-102708-04		

No.	Notes	MODEL TECHNICAL VARIATION COOLING CAPACITY ELECTRICAL DESIGNATION	RKNL- B 180 C	RKNL- B 210 C	RKNL- B 240 C	RKNL- B 241 C	RKNL- B 300 C
		COMPRESSOR GROUP					
		Compressor:	**7873**	**8050**	**7876**	**9517**	**7879**
75	Stk	Compressor #1	55-23156-20S	55-102471-03S	55-102471-02S	55-102471-01S	55-102471-13S
75	Stk	Compressor #2	55-23156-20S	55-102471-03S	55-102471-03S	55-102471-24S	55-102471-13S
		Plug Harness - Compressor #1	45-42522-73	45-42522-73	45-42522-73	45-42522-73	45-42522-73
		Plug Harness - Compressor #2	45-42522-72	45-42522-72	45-42522-72	45-42522-72	45-42522-72

No.	Notes	MODEL TECHNICAL VARIATION COOLING CAPACITY ELECTRICAL DESIGNATION	RKNL- B 180 D	RKNL- B 210 D	RKNL- B 240 D	RKNL- B 241 D	RKNL- B 300 D
		COMPRESSOR GROUP					
		Compressor:	**7874**	**8051**	**7877**	**9518**	**7880**
75	Stk	Compressor #1	55-23156-21S	55-102471-07S	55-102471-09S	55-102471-04S	55-102471-08S
75	Stk	Compressor #2	55-23156-21S	55-102471-07S	55-102471-07S	55-102471-25S	55-102471-08S
		Plug Harness - Compressor #1	45-42522-73	45-42522-73	45-42522-73	45-42522-73	45-42522-73
		Plug Harness - Compressor #2	45-42522-72	45-42522-72	45-42522-72	45-42522-72	45-42522-72

No.	Notes	MODEL TECHNICAL VARIATION COOLING CAPACITY ELECTRICAL DESIGNATION	RKNL- B 180 Y	RKNL- B 210 Y	RKNL- B 240 Y	RKNL- B 241 Y	RKNL- B 300 Y
		COMPRESSOR GROUP					
		Compressor:	**7875**	**8052**	**7878**	**9519**	**7881**
75	Stk	Compressor #1	55-23156-22S	55-102471-10S	55-102471-11S	55-102471-05	55-102471-12S
75	Stk	Compressor #2	55-23156-22S	55-102471-10S	55-102471-10S	55-102471-26	55-102471-12S
		Plug Harness - Compressor #1	45-42522-73	45-42522-73	45-42522-73	45-42522-73	45-42522-73
		Plug Harness - Compressor #2	45-42522-72	45-42522-72	45-42522-72	45-42522-72	45-42522-72

No.	Notes	MODEL TECHNICAL VARIATION COOLING CAPACITY ELECTRICAL DESIGNATION HEATING CAPACITY	RKNL- B 072 C,Y 15	RKNL- B 072 D 15	RKNL- B 073 C,Y 15	RKNL- B 073 D 15	RKNL- B 085 C 15
HEAT EXCHANGER, BURNER / MANIFOLD							
98	Stk	Heat Exchanger	AS-90645-01	AS-90645-01	AS-90645-01	AS-90645-01	AS-90645-01
99		Inducer Mounting Plate Gasket	68-42518-02	68-42518-02	68-42518-02	68-42518-02	68-42518-02
100		Turbulators	AE-58922-01 (6)	AE-58922-01 (6)	AE-58922-01 (6)	AE-58922-01 (6)	AE-58922-01 (6)
101		Inducer Mounting Plate	AE-90675-03	AE-90675-03	AE-90675-03	AE-90675-03	AE-90675-03
102		Inducer Blower Gasket - Before F1418	68-23643-02 (2)	68-23643-02 (2)	68-23643-02 (2)	68-23643-02 (2)	68-23643-02 (2)
102		Inducer Blower Gasket - On or After F1418	68-23643-03 (2)	68-23643-03 (2)	68-23643-03 (2)	68-23643-03 (2)	68-23643-03 (2)
103		Burner Support Brackets (2)	AE-90642-02	AE-90642-02	AE-90642-02	AE-90642-02	AE-90642-02
104		Burner Support	AE-90643-01	AE-90643-01	AE-90643-01	AE-90643-01	AE-90643-01
105	Stk	Spark Ignitor	62-23556-08	62-23556-08	62-23556-08	62-23556-08	62-23556-08
106	Stk	Burner Assembly	AS-90772-01	AS-90772-01	AS-90772-01	AS-90772-01	AS-90772-01
107		Burner Orifices - Natural Gas	See Orifice Selection Chart				
107		Burner Orifices - LP	See Orifice Selection Chart				
107		Number of Orifices	(6)	(6)	(6)	(6)	(6)
108		Square Head Plug	81-23593-01 (4)	81-23593-01 (4)	81-23593-01 (4)	81-23593-01 (4)	81-23593-01 (4)
109	Stk	Manifold	81-42509-03	81-42509-03	81-42509-03	81-42509-03	81-42509-03
110		Gas Valve	See Gas Controls				
111		Street Elbow - 1/2 in. 90 degree	81-40271-04	81-40271-04	81-40271-04	81-40271-04	81-40271-04
112	Stk	Flame Sensor	62-23543-02	62-23543-02	62-23543-02	62-23543-02	62-23543-02
113 a,b	Stk	Pressure Switch (2)	42-24335-25	42-24335-25	42-24335-25	42-24335-25	42-24335-25
114		Pressure Switch Mounting Bracket (Single Mount) - Before F1909	AE-90635-03 (2)	AE-90635-03 (2)	N/A	N/A	AE-90635-03 (2)
114		Pressure Switch Mounting Bracket (Single Mount) - After F1909	AE-90635-05 (2)	AE-90635-05 (2)	AE-90635-05 (2)	AE-90635-05 (2)	AE-90635-05 (2)
115		Heat Shield	AE-90644-02	AE-90644-02	AE-90644-02	AE-90644-02	AE-90644-02
116	Stk	Limit - Manual Reset (Burner Compartment) (2)	47-22861-01	47-22861-01	47-22861-01	47-22861-01	47-22861-01
117	Stk	Induced Draft Blower w/Gasket - Before F1418	70-23641-01 (2)	70-23641-02 (2)	70-23641-01 (2)	70-23641-02 (2)	70-23641-01 (2)
117	Stk	Induced Draft Blower w/Gasket - On or After F1418	70-23641-06 (2)	70-23641-02 (2)	70-23641-06 (2)	70-23641-02 (2)	70-23641-06 (2)
118		Flue Duct (2)	75-23678-01	75-23678-01	75-23678-01	75-23678-01	75-23678-01
		Gasket - Flue Duct - Before F1418	68-23680-04 (4)	68-23680-04 (4)	68-23680-04 (4)	68-23680-04 (4)	68-23680-04 (4)
		Gasket - Flue Duct - On or After F1418	68-23680-06 (2)	68-23680-06 (2)	68-23680-06 (2)	68-23680-06 (2)	68-23680-06 (2)
	Stk	Limit - Main Limit (Heat Exchanger Panel)	47-25349-14	47-25349-14	47-25349-14	47-25349-14	47-25349-09

No.	Notes	MODEL TECHNICAL VARIATION COOLING CAPACITY ELECTRICAL DESIGNATION HEATING CAPACITY	RKNL- B 085 D 15	RKNL- B 085 C,Y 22	RKNL- B 085 D 22		
HEAT EXCHANGER, BURNER / MANIFOLD							
98	Stk	Heat Exchanger	AS-90645-01	AS-90645-03	AS-90645-03		
99		Inducer Mounting Plate Gasket	68-42518-02	68-42518-02	68-42518-02		
100		Turbulators	AE-58922-01 (6)	AE-58922-01 (9)	AE-58922-01 (9)		
101		Inducer Mounting Plate	AE-90675-03	AE-90675-02	AE-90675-02		
102		Inducer Blower Gasket - Before F1418	68-23643-02 (2)	68-23643-02 (2)	68-23643-02 (2)		
102		Inducer Blower Gasket - On or After F1418	68-23643-03 (2)	68-23643-03 (2)	68-23643-03 (2)		
103		Burner Support Brackets (2)	AE-90642-02	AE-90642-02	AE-90642-02		
104		Burner Support	AE-90643-01	AE-90643-01	AE-90643-01		
105	Stk	Spark Ignitor	62-23556-08	62-23556-08	62-23556-08		
106	Stk	Burner Assembly	AS-90772-01	AS-90772-02	AS-90772-02		
107		Burner Orifices - Natural Gas	See Orifice Selection Chart				
107		Burner Orifices - LP	See Orifice Selection Chart				
107		Number of Orifices	(6)	(9)	(9)		
108		Square Head Plug	81-23593-01 (4)	81-23593-01 (1)	81-23593-01 (1)		
109	Stk	Manifold	81-42509-03	81-42509-02	81-42509-02		
110		Gas Valve	See Gas Controls				
111		Street Elbow - 1/2 in. 90 degree	81-40271-04	N/A	N/A		
112	Stk	Flame Sensor	62-23543-02	62-23543-02	62-23543-02		
113 a,b	Stk	Pressure Switch (2)	42-24335-25	42-24335-23	42-24335-23		
114		Pressure Switch Mounting Bracket (Single Mount) - Before F1909	AE-90635-03 (2)	AE-90635-03 (2)	AE-90635-03 (2)		
114		Pressure Switch Mounting Bracket (Single Mount) - After F1909	AE-90635-05 (2)	AE-90635-05 (2)	AE-90635-05 (2)		
115		Heat Shield	AE-90644-02	AE-90644-02	AE-90644-02		
116	Stk	Limit - Manual Reset (Burner Compartment) (2)	47-22861-01	47-22861-01	47-22861-01		
117	Stk	Induced Draft Blower w/Gasket - Before F1418	70-23641-02 (2)	70-23641-01 (2)	70-23641-02 (2)		
117	Stk	Induced Draft Blower w/Gasket - On or After F1418	70-23641-02 (2)	70-23641-06 (2)	70-23641-02 (2)		
118		Flue Duct (2)	75-23678-01	75-23678-01	75-23678-01		
		Gasket - Flue Duct - Before F1418	68-23680-04 (4)	68-23680-04 (4)	68-23680-04 (4)		
		Gasket - Flue Duct - On or After F1418	68-23680-06 (2)	68-23680-06 (2)	68-23680-06 (2)		
	Stk	Limit - Main Limit (Heat Exchanger Panel)	47-25349-09	47-25349-02	47-25349-02		

No.	Notes	MODEL TECHNICAL VARIATION COOLING CAPACITY ELECTRICAL DESIGNATION HEATING CAPACITY	RKNL- B 090/102/120 C/Y 15	RKNL- B 090/102/120 D 15	RKNL- B 090/102/120 C/Y 22	RKNL- B 090/102/120 D 22	RKNL- B 150 C,Y 15
HEAT EXCHANGER, BURNER / MANIFOLD							
98	Stk	Heat Exchanger	AS-90645-01	AS-90645-01	AS-90645-03	AS-90645-03	AS-90645-01
99		Inducer Mounting Plate Gasket	68-42518-02	68-42518-02	68-42518-02	68-42518-02	68-42518-02
100		Turbulators	AE-58922-01 (6)	AE-58922-01 (6)	AE-58922-01 (9)	AE-58922-01 (9)	AE-58922-01 (6)
101		Inducer Mounting Plate	AE-90675-03	AE-90675-03	AE-90675-02	AE-90675-02	AE-90675-03
102		Inducer Blower Gasket - Before F1418	68-23643-02 (2)	68-23643-02 (2)	68-23643-02 (2)	68-23643-02 (2)	68-23643-02 (2)
102		Inducer Blower Gasket - On or After F1418	68-23643-03 (2)	68-23643-03 (2)	68-23643-03 (2)	68-23643-03 (2)	68-23643-03 (2)
103		Burner Support Brackets (2)	AE-90642-02	AE-90642-02	AE-90642-02	AE-90642-02	AE-90642-02
104		Burner Support	AE-90643-01	AE-90643-01	AE-90643-01	AE-90643-01	AE-90643-01
105	Stk	Spark Ignitor	62-23556-08	62-23556-08	62-23556-08	62-23556-08	62-23556-08
106	Stk	Burner Assembly	AS-90772-01	AS-90772-01	AS-90772-02	AS-90772-02	AS-90772-01
107		Burner Orifices - Natural Gas	See Orifice Selection Chart				
107		Burner Orifices - LP	See Orifice Selection Chart				
107		Number of Orifices	(6)	(6)	(9)	(9)	(6)
108		Square Head Plug	81-23593-01 (4)	81-23593-01 (4)	81-23593-01 (1)	81-23593-01 (1)	81-23593-01 (4)
109	Stk	Manifold	81-42509-03	81-42509-03	81-42509-02	81-42509-02	81-42509-03
110		Gas Valve	See Gas Controls				
111		Street Elbow - 1/2 in. 90 degree	81-40271-04	81-40271-04	N/A	N/A	81-40271-04
112	Stk	Flame Sensor	62-23543-02	62-23543-02	62-23543-02	62-23543-02	62-23543-02
113 a,b	Stk	Pressure Switch (2)	42-24335-25	42-24335-25	42-24335-23	42-24335-23	42-24335-25
114		Pressure Switch Mounting Bracket (2) (Single Mount) - Before F1909	AE-90635-03	AE-90635-03	AE-90635-03	AE-90635-03	AE-90635-03
114		Pressure Switch Mounting Bracket (2) (Single Mount) - After F1909	AE-90635-05	AE-90635-05	AE-90635-05	AE-90635-05	AE-90635-05
115		Heat Shield	AE-90644-02	AE-90644-02	AE-90644-02	AE-90644-02	AE-90644-02
116	Stk	Limit - Manual Reset (Burner Compartment) (2)	47-22861-01	47-22861-01	47-22861-01	47-22861-01	47-22861-01
117	Stk	Induced Draft Blower w/Gasket - Before F1418	70-23641-01 (2)	70-23641-02 (2)	70-23641-01 (2)	70-23641-02 (2)	70-23641-01 (2)
117	Stk	Induced Draft Blower w/Gasket - On or After F1418	70-23641-06 (2)	70-23641-02 (2)	70-23641-06 (2)	70-23641-02 (2)	70-23641-06 (2)
118		Flue Duct (2)	75-23678-01	75-23678-01	75-23678-01	75-23678-01	75-23678-01
		Gasket - Flue Duct - Before F1418	68-23680-04 (4)	68-23680-04 (4)	68-23680-04 (4)	68-23680-04 (4)	68-23680-04 (4)
		Gasket - Flue Duct - On or After F1418	68-23680-06 (2)	68-23680-06 (2)	68-23680-06 (2)	68-23680-06 (2)	68-23680-06 (2)
	Stk	Limit - Main Limit (Heat Exchanger Panel)	47-25349-09	47-25349-09	47-25349-02	47-25349-02	47-25349-09

No.	Notes	MODEL TECHNICAL VARIATION COOLING CAPACITY ELECTRICAL DESIGNATION HEATING CAPACITY	RKNL- B 150 D 15	RKNL- B 150 C,Y 25	RKNL- B 150 D 25		
		HEAT EXCHANGER, BURNER / MANIFOLD					
98	Stk	Heat Exchanger	AS-90645-01	AS-90645-03	AS-90645-03		
99		Inducer Mounting Plate Gasket	68-42518-02	68-42518-02	68-42518-02		
100		Turbulators	AE-58922-01 (6)	AE-58922-01 (9)	AE-58922-01 (9)		
101		Inducer Mounting Plate	AE-90675-03	AE-90675-04	AE-90675-04		
102		Inducer Blower Gasket - Before F1418	68-23643-02 (2)	68-23643-02 (2)	68-23643-02 (2)		
102		Inducer Blower Gasket - On or After F1418	68-23643-03 (2)	68-23643-03 (2)	68-23643-03 (2)		
103		Burner Support Brackets (2)	AE-90642-02	AE-90642-02	AE-90642-02		
104		Burner Support	AE-90643-01	AE-90643-01	AE-90643-01		
105	Stk	Spark Ignitor	62-23556-08	62-23556-08	62-23556-08		
106	Stk	Burner Assembly	AS-90772-01	AS-90772-02	AS-90772-02		
107		Burner Orifices - Natural Gas	See Orifice Selection Chart				
107		Burner Orifices - LP	See Orifice Selection Chart				
107		Number of Orifices	(6)	(9)	(9)		
108		Square Head Plug	81-23593-01 (4)	81-23593-01 (1)	81-23593-01 (1)		
109	Stk	Manifold	81-42509-03	81-42509-02	81-42509-02		
110		Gas Valve	See Gas Controls				
111		Street Elbow - 1/2 in. 90 degree	81-40271-04	N/A	N/A		
112	Stk	Flame Sensor	62-23543-02	62-23543-02	62-23543-02		
113a	Stk	Pressure Switch - Before F3311	42-24335-25	42-24335-24 (See Note 3)	42-24335-24 (See Note 3)		
113a	Stk	Pressure Switch - After F3311	42-24335-25	42-24335-32	42-24335-32		
113b	Stk	Pressure Switch	42-24335-25	42-24335-23 (See Note 3)	42-24335-23 (See Note 3)		
114		Pressure Switch Mounting Bracket (2) (Single Mount) - Before F1909	AE-90635-03	AE-90635-03	AE-90635-03		
114		Pressure Switch Mounting Bracket (2) (Single Mount) - After F1909	AE-90635-05	AE-90635-05	AE-90635-05		
115		Heat Shield	AE-90644-02	AE-90644-02	AE-90644-02		
116	Stk	Limit - Manual Reset (Burner Compartment) (2)	47-22861-01	47-22861-01	47-22861-01		
117	Stk	Induced Draft Blower w/Gasket - Before F1418	70-23641-02 (2)	70-23641-01 (2)	70-23641-02 (2)		
117	Stk	Induced Draft Blower w/Gasket - On or After F1418	70-23641-02 (2)	70-23641-06 (2)	70-23641-02 (2)		
118		Flue Duct (2)	75-23678-01	75-23678-01	75-23678-01		
		Gasket - Flue Duct - Before F1418	68-23680-04 (4)	68-23680-04 (4)	68-23680-04 (4)		
		Gasket - Flue Duct - On or After F1418	68-23680-06 (2)	68-23680-06 (2)	68-23680-06 (2)		
	Stk	Limit - Main Limit (Heat Exchanger Panel)	47-25349-09	47-25349-04	47-25349-04		

No.	Notes	MODEL TECHNICAL VARIATION COOLING CAPACITY ELECTRICAL DESIGNATION HEATING CAPACITY	RKNL- B 151 C 15	RKNL- B 151 D 15	RKNL- B 151 C,Y 25	RKNL- B 151 D 25	
		HEAT EXCHANGER, BURNER / MANIFOLD					
98	Stk	Heat Exchanger	AS-90645-01	AS-90645-01	AS-90645-03	AS-90645-03	
99		Inducer Mounting Plate Gasket	68-42518-02	68-42518-02	68-42518-02	68-42518-02	
100		Turbulators	AE-58922-01 (6)	AE-58922-01 (6)	AE-58922-01 (9)	AE-58922-01 (9)	
101		Inducer Mounting Plate	AE-90675-03	AE-90675-03	AE-90675-04	AE-90675-04	
102		Inducer Blower Gasket - Before F1418	68-23643-02 (2)	68-23643-02 (2)	68-23643-02 (2)	68-23643-02 (2)	
102		Inducer Blower Gasket - On or After F1418	68-23643-03 (2)	68-23643-03 (2)	68-23643-03 (2)	68-23643-03 (2)	
103		Burner Support Brackets (2)	AE-90642-02	AE-90642-02	AE-90642-02	AE-90642-02	
104		Burner Support	AE-90643-01	AE-90643-01	AE-90643-01	AE-90643-01	
105	Stk	Spark Ignitor	62-23556-08	62-23556-08	62-23556-08	62-23556-08	
106	Stk	Burner Assembly	AS-90772-01	AS-90772-01	AS-90772-02	AS-90772-02	
107		Burner Orifices - Natural Gas	See Orifice Selection Chart				
107		Burner Orifices - LP	See Orifice Selection Chart				
107		Number of Orifices	(6)	(6)	(9)	(9)	
108		Square Head Plug	81-23593-01 (4)	81-23593-01 (4)	81-23593-01 (1)	81-23593-01 (1)	
109	Stk	Manifold	81-42509-03	81-42509-03	81-42509-02	81-42509-02	
110		Gas Valve	See Gas Controls				
111		Street Elbow - 1/2 in. 90 degree	81-40271-04	81-40271-04	N/A	N/A	
112	Stk	Flame Sensor	62-23543-02	62-23543-02	62-23543-02	62-23543-02	
113a	Stk	Pressure Switch - Before F3311	42-24335-25	42-24335-25	42-24335-24 (See Note 3)	42-24335-24 (See Note 3)	
113a	Stk	Pressure Switch - After F3311	42-24335-25	42-24335-25	42-24335-32	42-24335-32	
113b	Stk	Pressure Switch	42-24335-25	42-24335-25	42-24335-23 (See Note 3)	42-24335-23 (See Note 3)	
114		Pressure Switch Mounting Bracket (Single Mount)	AE-90635-05 (2)	AE-90635-05 (2)	AE-90635-05 (2)	AE-90635-05 (2)	
115		Heat Shield	AE-90644-02	AE-90644-02	AE-90644-02	AE-90644-02	
116	Stk	Limit - Manual Reset (Burner Compartment) (2)	47-22861-01	47-22861-01	47-22861-01	47-22861-01	
117	Stk	Induced Draft Blower w/Gasket - Before F1418	70-23641-01 (2)	70-23641-02 (2)	70-23641-01 (2)	70-23641-02 (2)	
117	Stk	Induced Draft Blower w/Gasket - On or After F1418	70-23641-06 (2)	70-23641-02 (2)	70-23641-06 (2)	70-23641-02 (2)	
118		Flue Duct (2)	75-23678-01	75-23678-01	75-23678-01	75-23678-01	
		Gasket - Flue Duct - Before F1418	68-23680-04 (4)	68-23680-04 (4)	68-23680-04 (4)	68-23680-04 (4)	
		Gasket - Flue Duct - On or After F1418	68-23680-06 (2)	68-23680-06 (2)	68-23680-06 (2)	68-23680-06 (2)	
	Stk	Limit - Main Limit (Heat Exchanger Panel)	47-25349-09	47-25349-09	47-25349-04	47-25349-04	

No.	Notes	MODEL TECHNICAL VARIATION COOLING CAPACITY ELECTRICAL DESIGNATION HEATING CAPACITY	RKNL- B 180 C 25	RKNL- B 180 D 25	RKNL- B 180 C,Y 35	RKNL- B 180 D 35	
		HEAT EXCHANGER, BURNER / MANIFOLD					
	Stk	Heat Exchanger	AS-90645-12	AS-90645-12	AS-90645-15	AS-90645-15	
		Inducer Mounting Plate Gasket	68-42518-03	68-42518-03	68-42518-03	68-42518-03	
		Turbulators	AE-58922-02 (10)	AE-58922-02 (10)	AE-58922-02 (14)	AE-58922-02 (14)	
		Inducer Mounting Plate	AE-90675-08	AE-90675-08	AE-90675-06	AE-90675-06	
		Inducer Blower Gasket - Before F1418	68-23643-02 (2)	68-23643-02 (2)	68-23643-02 (3)	68-23643-02 (3)	
		Inducer Blower Gasket - On or After F1418	68-23643-03 (2)	68-23643-03 (2)	68-23643-03 (3)	68-23643-03 (3)	
103		Burner Support Brackets (2)	AE-90642-02	AE-90642-02	AE-90642-02	AE-90642-02	
104		Burner Support	AS-90830-01	AS-90830-01	AS-90830-01	AS-90830-01	
105	Stk	Spark Ignitor	62-23556-10	62-23556-10	62-23556-10	62-23556-10	
106	Stk	Burner Assembly	AS-90641-22	AS-90641-22	AS-90641-23	AS-90641-23	
107		Burner Orifices - Natural Gas	See Orifice Selection Chart				
107		Burner Orifices - LP	See Orifice Selection Chart				
107		Number of Orifices	(10)	(10)	(14)	(14)	
108		Square Head Plug	81-23593-01 (3)	81-23593-01 (3)	81-23593-01 (1)	81-23593-01 (1)	
109	Stk	Manifold	81-42509-07	81-42509-07	81-42509-04	81-42509-04	
110		Gas Valve	See Gas Controls				
111		Street Elbow - 3/4 in. 90 degree	81-40271-05	81-40271-05	81-40271-05	81-40271-05	
		Nipple - 3/4 in. x 2-1/2 in.	81-40383-04	81-40383-04	81-40383-04	81-40383-04	
		Standard Elbow - 3/4 in.	81-40394-05	81-40394-05	N/A	N/A	
		Standard Elbow - 1 in. x 3/4 in. 90 degree	N/A	N/A	81-40394-24	81-40394-24	
112	Stk	Flame Sensor	62-23543-02	62-23543-02	62-23543-02	62-23543-02	
	Stk	Pressure Switch - High	42-24335-23 (1)	42-24335-23 (1)	42-24335-23 (1)	42-24335-23 (1)	
	Stk	Pressure Switch - Low	42-24335-24 (1)	42-24335-24 (1)	42-24335-24 (2)	42-24335-24 (2)	
		Pressure Switch Mounting Bracket (Single Mount) - Before F1909	AE-90635-03 (1)	AE-90635-03 (1)	AE-90635-03 (2)	AE-90635-03 (2)	
		Pressure Switch Mounting Bracket (Single Mount) - After F1909	AE-90635-05 (1)	AE-90635-05 (1)	AE-90635-05 (2)	AE-90635-05 (2)	
		Pressure Switch Mounting Bracket (Dual Mount)	AE-90635-04	AE-90635-04	AE-90635-04	AE-90635-04	
115		Heat Shield	AE-90644-03	AE-90644-03	AE-90644-03	AE-90644-03	
116	Stk	Limit - Manual Reset (Burner Compartment) (4)	47-22861-01	47-22861-01	47-22861-01	47-22861-01	
	Stk	Induced Draft Blower w/Gasket - Before F1418	70-23641-01 (2)	70-23641-02 (2)	70-23641-01 (3)	70-23641-02 (3)	
	Stk	Induced Draft Blower w/Gasket - On or After F1418	70-23641-06 (2)	70-23641-02 (2)	70-23641-06 (3)	70-23641-02 (3)	
		Flue Duct	75-23678-01 (2)	75-23678-01 (2)	75-23678-01 (3)	75-23678-01 (3)	
		Gasket - Flue Duct - Before F1418	68-23680-04 (4)	68-23680-04 (4)	68-23680-04 (6)	68-23680-04 (6)	
		Gasket - Flue Duct - On or After F1418	68-23680-06 (2)	68-23680-06 (2)	68-23680-06 (3)	68-23680-06 (3)	
	Stk	Limit - Main Limit (Heat Exchanger Panel)	47-25349-09	47-25349-09	47-25349-03	47-25349-03	

No.	Notes	MODEL TECHNICAL VARIATION COOLING CAPACITY ELECTRICAL DESIGNATION HEATING CAPACITY	RKNL- B 210 C 25	RKNL- B 210 D 25	RKNL- B 210 C,Y 35	RKNL- B 210 D 35	
		HEAT EXCHANGER, BURNER / MANIFOLD					
	Stk	Heat Exchanger	AS-90645-12	AS-90645-12	AS-90645-15	AS-90645-15	
		Inducer Mounting Plate Gasket	68-42518-03	68-42518-03	68-42518-03	68-42518-03	
		Turbulators	AE-58922-02 (10)	AE-58922-02 (10)	AE-58922-02 (14)	AE-58922-02 (14)	
		Inducer Mounting Plate	AE-90675-08	AE-90675-08	AE-90675-06	AE-90675-06	
		Inducer Blower Gasket - Before F1418	68-23643-02 (2)	68-23643-02 (2)	68-23643-02 (3)	68-23643-02 (3)	
		Inducer Blower Gasket - On or After F1418	68-23643-03 (2)	68-23643-03 (2)	68-23643-03 (3)	68-23643-03 (3)	
103		Burner Support Brackets (2)	AE-90642-02	AE-90642-02	AE-90642-02	AE-90642-02	
104		Burner Support	AS-90830-01	AS-90830-01	AS-90830-01	AS-90830-01	
105	Stk	Spark Ignitor	62-23556-10	62-23556-10	62-23556-10	62-23556-10	
106	Stk	Burner Assembly	AS-90641-22	AS-90641-22	AS-90641-23	AS-90641-23	
107		Burner Orifices - Natural Gas	See Orifice Selection Chart				
107		Burner Orifices - LP	See Orifice Selection Chart				
107		Number of Orifices	(10)	(10)	(14)	(14)	
108		Square Head Plug	81-23593-01 (3)	81-23593-01 (3)	81-23593-01 (1)	81-23593-01 (1)	
109	Stk	Manifold	81-42509-07	81-42509-07	81-42509-04	81-42509-04	
110		Gas Valve	See Gas Controls				
111		Street Elbow - 3/4 in. 90 degree	81-40271-05	81-40271-05	81-40271-05	81-40271-05	
		Nipple - 3/4 in. x 2-1/2 in.	81-40383-04	81-40383-04	81-40383-04	81-40383-04	
		Standard Elbow - 3/4 in.	81-40394-05	81-40394-05	N/A	N/A	
		Standard Elbow - 1 in. x 3/4 in. 90 degree	N/A	N/A	81-40394-24	81-40394-24	
112	Stk	Flame Sensor	62-23543-02	62-23543-02	62-23543-02	62-23543-02	
	Stk	Pressure Switch - High	42-24335-23 (1)	42-24335-23 (1)	42-24335-23 (1)	42-24335-23 (1)	
	Stk	Pressure Switch - Low	42-24335-24 (1)	42-24335-24 (1)	42-24335-24 (2)	42-24335-24 (2)	
		Pressure Switch Mounting Bracket (Single Mount)	AE-90635-05 (1)	AE-90635-05 (1)	AE-90635-05 (2)	AE-90635-05 (2)	
		Pressure Switch Mounting Bracket (Dual Mount)	AE-90635-04	AE-90635-04	AE-90635-04	AE-90635-04	
115		Heat Shield	AE-90644-03	AE-90644-03	AE-90644-03	AE-90644-03	
116	Stk	Limit - Manual Reset (Burner Compartment) (4)	47-22861-01	47-22861-01	47-22861-01	47-22861-01	
	Stk	Induced Draft Blower w/Gasket - Before F1418	70-23641-01 (2)	70-23641-02 (2)	70-23641-01 (3)	70-23641-02 (3)	
	Stk	Induced Draft Blower w/Gasket - On or After F1418	70-23641-06 (2)	70-23641-02 (2)	70-23641-06 (3)	70-23641-02 (3)	
		Flue Duct	75-23678-01 (2)	75-23678-01 (2)	75-23678-01 (3)	75-23678-01 (3)	
		Gasket - Flue Duct - Before F1418	68-23680-04 (4)	68-23680-04 (4)	68-23680-04 (6)	68-23680-04 (6)	
		Gasket - Flue Duct - On or After F1418	68-23680-06 (2)	68-23680-06 (2)	68-23680-06 (3)	68-23680-06 (3)	
	Stk	Limit - Main Limit (Heat Exchanger Panel)	47-25349-09	47-25349-09	47-25349-03	47-25349-03	

No.	Notes	MODEL TECHNICAL VARIATION COOLING CAPACITY ELECTRICAL DESIGNATION HEATING CAPACITY	RKNL- B 240 C 30	RKNL- B 240 D 30	RKNL- B 240 C,Y 40	RKNL- B 240 D 40	
		HEAT EXCHANGER, BURNER / MANIFOLD					
	Stk	Heat Exchanger	AS-90645-16	AS-90645-16	AS-90645-15	AS-90645-15	
		Inducer Mounting Plate Gasket	68-42518-03	68-42518-03	68-42518-03	68-42518-03	
		Turbulators	AE-58922-02 (12)	AE-58922-02 (12)	AE-58922-02 (14)	AE-58922-02 (14)	
		Inducer Mounting Plate	AE-90675-07	AE-90675-07	AE-90675-05	AE-90675-05	
		Inducer Blower Gasket - Before F1418	68-23643-02 (3)	68-23643-02 (3)	68-23643-02 (4)	68-23643-02 (4)	
		Inducer Blower Gasket - On or After F1418	68-23643-03 (3)	68-23643-03 (3)	68-23643-03 (4)	68-23643-03 (4)	
103		Burner Support Brackets (2)	AE-90642-02	AE-90642-02	AE-90642-02	AE-90642-02	
104		Burner Support	AS-90830-01	AS-90830-01	AS-90830-01	AS-90830-01	
105	Stk	Spark Ignitor	62-23556-10	62-23556-10	62-23556-10	62-23556-10	
106	Stk	Burner Assembly	AS-90641-24	AS-90641-24	AS-90641-18	AS-90641-18	
107		Burner Orifices - Natural Gas	See Orifice Selection Chart				
107		Burner Orifices - LP	See Orifice Selection Chart				
107		Number of Orifices	(12)	(12)	(14)	(14)	
108		Square Head Plug	81-23593-01 (1)	81-23593-01 (1)	81-23593-01 (1)	81-23593-01 (1)	
109	Stk	Manifold	81-42509-07	81-42509-07	81-42509-04	81-42509-04	
110		Gas Valve	See Gas Controls				
111		Street Elbow - 3/4 in. 90 degree	81-40271-05	81-40271-05	81-40271-05	81-40271-05	
		Nipple - 3/4 in. x 2-1/2 in.	81-40383-04	81-40383-04	81-40383-04	81-40383-04	
		Standard Elbow - 3/4 in.	81-40394-05	81-40394-05	N/A	N/A	
		Standard Elbow - 1 in. x 3/4 in. 90 degree	N/A	N/A	81-40394-24	81-40394-24	
112	Stk	Flame Sensor	62-23543-02	62-23543-02	62-23543-02	62-23543-02	
	Stk	Pressure Switch - High	42-24335-21 (1)	42-24335-21 (1)	42-24335-23 (2)	42-24335-23 (2)	
	Stk	Pressure Switch - Low	42-24335-24 (2)	42-24335-24 (2)	42-24335-24 (2)	42-24335-24 (2)	
		Pressure Switch Mounting Bracket (Single Mount) - Before F1909	AE-90635-03 (2)	AE-90635-03 (2)	AE-90635-03 (2)	AE-90635-03 (2)	
		Pressure Switch Mounting Bracket (Single Mount) - After F1909	AE-90635-05 (2)	AE-90635-05 (2)	AE-90635-05 (2)	AE-90635-05 (2)	
		Pressure Switch Mounting Bracket (Dual Mount)	AE-90635-04	AE-90635-04	AE-90635-04	AE-90635-04	
115		Heat Shield	AE-90644-03	AE-90644-03	AE-90644-03	AE-90644-03	
116	Stk	Limit - Manual Reset (Burner Compartment) (4)	47-22861-01	47-22861-01	47-22861-01	47-22861-01	
	Stk	Induced Draft Blower w/Gasket - Before F1418	70-23641-01 (3)	70-23641-02 (3)	70-23641-01 (4)	70-23641-02 (4)	
	Stk	Induced Draft Blower w/Gasket - On or After F1418	70-23641-06 (3)	70-23641-02 (3)	70-23641-06 (4)	70-23641-02 (4)	
		Flue Duct	75-23678-01 (3)	75-23678-01 (3)	75-23678-01 (4)	75-23678-01 (4)	
		Gasket - Flue Duct - Before F1418	68-23680-04 (6)	68-23680-04 (6)	68-23680-04 (8)	68-23680-04 (8)	
		Gasket - Flue Duct - On or After F1418	68-23680-06 (3)	68-23680-06 (3)	68-23680-06 (4)	68-23680-06 (4)	
	Stk	Limit - Main Limit (Heat Exchanger Panel)	47-25349-14	47-25349-14	47-25349-14	47-25349-14	

No.	Notes	MODEL TECHNICAL VARIATION COOLING CAPACITY ELECTRICAL DESIGNATION HEATING CAPACITY	RKNL- B 241 C 30	RKNL- B 241 D 30	RKNL- B 241 C,Y 40	RKNL- B 241 D 40	
		HEAT EXCHANGER, BURNER / MANIFOLD					
	Stk	Heat Exchanger	AS-90645-16	AS-90645-16	AS-90645-15	AS-90645-15	
		Inducer Mounting Plate Gasket	68-42518-03	68-42518-03	68-42518-03	68-42518-03	
		Turbulators	AE-58922-02 (12)	AE-58922-02 (12)	AE-58922-02 (14)	AE-58922-02 (14)	
		Inducer Mounting Plate	AE-90675-07	AE-90675-07	AE-90675-05	AE-90675-05	
		Inducer Blower Gasket	68-23643-03 (3)	68-23643-03 (3)	68-23643-03 (4)	68-23643-03 (4)	
103		Burner Support Brackets (2)	AE-90642-02	AE-90642-02	AE-90642-02	AE-90642-02	
104		Burner Support	AS-90830-01	AS-90830-01	AS-90830-01	AS-90830-01	
105	Stk	Spark Ignitor	62-23556-10	62-23556-10	62-23556-10	62-23556-10	
106	Stk	Burner Assembly	AS-90641-24	AS-90641-24	AS-90641-18	AS-90641-18	
107		Burner Orifices - Natural Gas	See Orifice Selection Chart				
107		Burner Orifices - LP	See Orifice Selection Chart				
107		Number of Orifices	(12)	(12)	(14)	(14)	
108		Square Head Plug	81-23593-01 (1)	81-23593-01 (1)	81-23593-01 (1)	81-23593-01 (1)	
109	Stk	Manifold	81-42509-07	81-42509-07	81-42509-04	81-42509-04	
110		Gas Valve	See Gas Controls				
111		Street Elbow - 3/4 in. 90 degree	81-40271-05	81-40271-05	81-40271-05	81-40271-05	
		Nipple - 3/4 in. x 2-1/2 in.	81-40383-04	81-40383-04	81-40383-04	81-40383-04	
		Standard Elbow - 3/4 in.	81-40394-05	81-40394-05	N/A	N/A	
		Standard Elbow - 1 in. x 3/4 in. 90 degree	N/A	N/A	81-40394-24	81-40394-24	
112	Stk	Flame Sensor	62-23543-02	62-23543-02	62-23543-02	62-23543-02	
	Stk	Pressure Switch - High	42-105601-21 (1)	42-105601-21 (1)	42-105601-25 (2)	42-105601-25 (2)	
	Stk	Pressure Switch - Low	42-105601-24 (2)	42-105601-24 (2)	42-105601-24 (2)	42-105601-24 (2)	
		Pressure Switch Mounting Bracket (Single Mount)	AE-90635-05 (2)	AE-90635-05 (2)	AE-90635-05 (2)	AE-90635-05 (2)	
		Pressure Switch Mounting Bracket (Dual Mount)	AE-90635-04	AE-90635-04	AE-90635-04	AE-90635-04	
115		Heat Shield	AE-90644-03	AE-90644-03	AE-90644-03	AE-90644-03	
116	Stk	Limit - Manual Reset (Burner Compartment) (4)	47-22861-01	47-22861-01	47-22861-01	47-22861-01	
	Stk	Induced Draft Blower w/Gasket	70-23641-06 (3)	70-23641-02 (3)	70-23641-06 (4)	70-23641-02 (4)	
		Flue Duct	75-23678-01 (3)	75-23678-01 (3)	75-23678-01 (4)	75-23678-01 (4)	
		Gasket - Flue Duct	68-23680-06 (3)	68-23680-06 (3)	68-23680-06 (4)	68-23680-06 (4)	
	Stk	Limit - Main Limit (Heat Exchanger Panel)	47-25349-14	47-25349-14	47-25349-14	47-25349-14	

No.	Notes	MODEL TECHNICAL VARIATION COOLING CAPACITY ELECTRICAL DESIGNATION HEATING CAPACITY	RKNL- B 300 C 30	RKNL- B 300 D 30	RKNL- B 300 C,Y 40	RKNL- B 300 D 40	
		HEAT EXCHANGER, BURNER / MANIFOLD					
	Stk	Heat Exchanger	AS-90645-16	AS-90645-16	AS-90645-15	AS-90645-15	
		Inducer Mounting Plate Gasket	68-42518-03	68-42518-03	68-42518-03	68-42518-03	
		Turbulators	AE-58922-02 (12)	AE-58922-02 (12)	AE-58922-02 (14)	AE-58922-02 (14)	
		Inducer Mounting Plate	AE-90675-07	AE-90675-07	AE-90675-05	AE-90675-05	
		Inducer Blower Gasket - Before F1418	68-23643-02 (3)	68-23643-02 (3)	68-23643-02 (4)	68-23643-02 (4)	
		Inducer Blower Gasket - On or After F1418	68-23643-03 (3)	68-23643-03 (3)	68-23643-03 (4)	68-23643-03 (4)	
103		Burner Support Brackets (2)	AE-90642-02	AE-90642-02	AE-90642-02	AE-90642-02	
104		Burner Support	AS-90830-01	AS-90830-01	AS-90830-01	AS-90830-01	
105	Stk	Spark Ignitor	62-23556-10	62-23556-10	62-23556-10	62-23556-10	
106	Stk	Burner Assembly	AS-90641-24	AS-90641-24	AS-90641-18	AS-90641-18	
107		Burner Orifices - Natural Gas	See Orifice Selection Chart				
107		Burner Orifices - LP	See Orifice Selection Chart				
107		Number of Orifices	(12)	(12)	(14)	(14)	
108		Square Head Plug	81-23593-01 (1)	81-23593-01 (1)	81-23593-01 (1)	81-23593-01 (1)	
109	Stk	Manifold	81-42509-07	81-42509-07	81-42509-04	81-42509-04	
110		Gas Valve	See Gas Controls				
111		Street Elbow - 3/4 in. 90 degree	81-40271-05	81-40271-05	81-40271-05	81-40271-05	
		Nipple - 3/4 in. x 2-1/2 in.	81-40383-04	81-40383-04	81-40383-04	81-40383-04	
		Standard Elbow - 3/4 in.	81-40394-05	81-40394-05	N/A	N/A	
		Standard Elbow - 1 in. x 3/4 in. 90 degree	N/A	N/A	81-40394-24	81-40394-24	
112	Stk	Flame Sensor	62-23543-02	62-23543-02	62-23543-02	62-23543-02	
	Stk	Pressure Switch - High	42-24335-21 (1)	42-24335-21 (1)	42-24335-23 (2)	42-24335-23 (2)	
	Stk	Pressure Switch - Low	42-24335-24 (2)	42-24335-24 (2)	42-24335-24 (2)	42-24335-24 (2)	
		Pressure Switch Mounting Bracket (Single Mount) - Before F1909	AE-90635-03 (2)	AE-90635-03 (2)	AE-90635-03 (2)	AE-90635-03 (2)	
		Pressure Switch Mounting Bracket (Single Mount) - After F1909	AE-90635-05 (2)	AE-90635-05 (2)	AE-90635-05 (2)	AE-90635-05 (2)	
		Pressure Switch Mounting Bracket (Dual Mount)	AE-90635-04	AE-90635-04	AE-90635-04	AE-90635-04	
115		Heat Shield	AE-90644-03	AE-90644-03	AE-90644-03	AE-90644-03	
116	Stk	Limit - Manual Reset (Burner Compartment) (4)	47-22861-01	47-22861-01	47-22861-01	47-22861-01	
	Stk	Induced Draft Blower w/Gasket - Before F1418	70-23641-01 (3)	70-23641-02 (3)	70-23641-01 (4)	70-23641-02 (4)	
	Stk	Induced Draft Blower w/Gasket - On or After F1418	70-23641-06 (3)	70-23641-02 (3)	70-23641-06 (4)	70-23641-02 (4)	
		Flue Duct	75-23678-01 (3)	75-23678-01 (3)	75-23678-01 (4)	75-23678-01 (4)	
		Gasket - Flue Duct - Before F1418	68-23680-04 (6)	68-23680-04 (6)	68-23680-04 (8)	68-23680-04 (8)	
		Gasket - Flue Duct - On or After F1418	68-23680-06 (3)	68-23680-06 (3)	68-23680-06 (4)	68-23680-06 (4)	
	Stk	Limit - Main Limit (Heat Exchanger Panel)	47-25349-09	47-25349-09	47-25349-03	47-25349-03	

No.	Notes	MODEL GAS CODE	RKNL- 2L	RKNL- 2M	RKNL- 2N
		GAS CONTROLS			
110	Stk	Gas Valve - Natural Gas	60-101778-01	60-101778-01	60-102405-01
110	Stk	Gas Valve - LP	See Note 2	See Note 2	See Note 1
	Stk	Integrated Furnace Control Board (IFC)	62-102860-01	62-102860-01	62-102860-01
111		Street Elbow	See Heat Exchanger Group		
	Stk	LP Conversion Kit	FP-14	FP-14	FP-24

No.	Notes	MODEL TECHNICAL VARIATION COOLING CAPACITY	RKNL- B 072-151
		ACCESSORIES	
		Louver Panel - Option (6 - 10 Ton) (Neutra Green)	RXRX-AAD01C
		Louver Panel - Option (6 - 10 Ton) (Granite/Steel Gray)	AXRX-AAD01C
		Carbon Dioxide Sensor	RXRX-AR02
		Dual Enthalpy Kit	RXRX-AV02
		Manual Fresh Air (Left Panel Mounted) (Neutra Green)	RXRF-KDA1
		Manual Fresh Air (Left Panel Mounted) (Neutra Green)	AXRF-KDA1
		Motor Kit for RXRF-KDA1	RXRX-AW02
		Manual Fresh Air (Return Panel) (Neutra Green)	RXRF-JDA1
		Manual Fresh Air (Return Panel) (Granite/Steel Gray)	AXRF-JDA1
		Motorized Fresh Air (Return Panel) (Neutra Green)	RXRF-JDB1
		Motorized Fresh Air (Return Panel) (Granite/Steel Gray)	AXRF-JDB1
		Time Delay Relay - Option	RXMD-A04
		Freeze Stat - Option	RXRX-AM01
		Convenience Outlet - Option	RXRX-AN01
		Low Ambient Control Kit (One per Compressor)	RXRZ-C02

No.	Notes	MODEL TECHNICAL VARIATION COOLING CAPACITY	RKNL- B 072-151
		ECONOMIZERS	
		Economizer - Single Enthalpy (Neutra Green)	RXRD-PDCM3
		Economizer - Single Enthalpy (Granite/Steel Gray)	AXRD-PDCM3
		Economizer - Single Enthalpy w/Smoke Detector (Neutra Green)	RXRD-SDCM3
		Economizer - Single Enthalpy w/Smoke Detector (Granite/Steel Gray)	AXRD-SDCM3
		Horizontal Economizer - Single Enthalpy (Neutra Green)	RXRD-RDCM3
		Horizontal Economizer - Single Enthalpy (Granite/Steel Gray)	AXRD-RDCM3

No.		MODEL TECHNICAL VARIATION COOLING CAPACITY	RKNL- B 072-151
		POWER EXHAUST	
		Power Exhaust	RXRX-BFF02C
		Power Exhaust	RXRX-BFF02D
		Power Exhaust	RXRX-BFF02Y

No.	Notes	MODEL TECHNICAL VARIATION COOLING CAPACITY	RKNL- B 180-300
		ACCESSORIES	
		Carbon Dioxide Sensor	RXRX-AR02
		Dual Enthalpy Kit	RXRX-AV02
		Manual Fresh Air Damper (Neutra Green)	RXRF-KFA1
		Manual Fresh Air Damper (Granite/Steel Gray)	AXRF-KFA1
		Motorized Kit for ()XRF-KFA1	RXRX-AW03
		Freeze Stat Kit	RXRX-AM03
		Unwired Convenience Outlet	RXRX-AN01
		Unfused Service Disconnect	RXRX-AP01
		Low Ambient Control Kit (One per Compressor)	RXRZ-C02
		Louver Panel Kit (Hail Guard) - Left and Right (Granite/Steel Gray)	AXRX-AAD01L

No.	Notes	MODEL TECHNICAL VARIATION COOLING CAPACITY	RKNL- B 180-300
		ECONOMIZERS	
		Downflow Economizer - Single Enthalpy (Neutra Green)	RXRD-PGCM3
		Downflow Economizer - Single Enthalpy (Granite/Steel Gray)	AXRD-PGCM3
		Downfloe Economizer - Single Enthalpy w/Smoke Detector (Neutra Green)	RXRD-SGCM3
		Downfloe Economizer - Single Enthalpy w/Smoke Detector (Granite/Steel Gray)	AXRD-SGCM3
		Horizontal Economizer - Single Enthalpy (Neutra Green)	RXRD-RGCM3
		Horizontal Economizer - Single Enthalpy (Granite/Steel Gray)	AXRD-RGCM3

No.		MODEL TECHNICAL VARIATION COOLING CAPACITY	RKNL- B 180-300
		POWER EXHAUST	
		Power Exhaust	RXRX-BGF05C
		Power Exhaust	RXRX-BGF05D
		Power Exhaust	RXRX-BGF05Y

PACKAGE EQUIPMENT - ORIFICE SELECTION CHART - NATURAL GAS

CAUTION: Selection of the correct Natural Gas Orifice requires the following information for the specific installation:
1) Furnace Input Rating (BTU/HR)
2) Number of Burners
2) Altitude (ft.)
For detailed information and instructions for Orifice selection, see the Gas Furnace LP Conversion Kit Index 92-21519-47 and the latest edition of the National Fuel Gas Code Handbook, or the National Standard of Canada, Natural Gas and Propane Installation Code, CAN B149.1.

CAUTION: This information is provided for replacement purposes only. Conversion for operation at High Altitude must be done using the kit specified on the product specification sheet for the unit.

NOTE: This Orifice sizing chart is based on a Natural Gas heating value of 1075 BTU/cu. ft and a pressure setting of 3.5 in. water column.

NOTE: Factory installed orifices are calculated and sized based on a Natural Gas heating value of 1075 BTU/cu. ft. and an elevation of 0 - 2000 ft.

Furnace Input Rating (BTU/HR)	Canadian High Altitude Derated Input (BTU/HR)	Number of Burners	Elevation (ft.) Country					
			0 - 2000 U.S.	2001 - 4000 U.S.	4001 - 6000 U.S.	8000+ U.S.	0 - 2000 Canada	2001 - 4500 Canada
40,000	36,000	**2**	62-22175-45	62-22175-47	62-22175-48	62-22175-49	62-22175-45	62-22175-15
60,000	54,000	**3**	62-22175-45	62-22175-47	62-22175-48	62-22175-49	62-22175-45	62-22175-15
72,000	N/A	**4**	62-22175-15	62-22175-49	62-22175-50	62-22175-51	62-22175-15	N/A
80,000	72,000	**4**	62-22175-45	62-22175-47	62-22175-48	62-22175-49	62-22175-45	62-22175-15
90,000	N/A	**5**	62-22175-15	62-22175-49	62-22175-50	62-22175-51	62-22175-15	N/A
100,000	90,000	**5**	62-22175-45	62-22175-47	62-22175-48	62-22175-49	62-22175-45	62-22175-15
120,000	108,000	**6**	62-22175-45	62-22175-47	62-22175-48	62-22175-49	62-22175-45	62-22175-15
135,000	121,500	**6**	62-22175-44	62-22175-45	62-22175-47	62-22175-48	62-22175-44	62-22175-45
150,000	135,000	**6**	62-22175-42	62-22175-43	62-22175-44	62-22175-45	62-22175-42	62-22175-44
180,000	N/A	**9**	62-22175-45	62-22175-47	62-22175-48	62-22175-49	62-22175-45	N/A
210,000	N/A	**9**	62-22175-43	62-22175-44	62-22175-45	62-22175-47	62-22175-43	N/A
210,000	N/A	**10**	62-22175-45	62-22175-47	62-22175-48	62-22175-49	62-22175-45	N/A
225,000	202,500	**9**	62-22175-42	62-22175-43	62-22175-44	62-22175-45	62-22175-42	62-22175-44
250,000	225,000	**10**	62-22175-42	62-22175-43	62-22175-44	62-22175-45	62-22175-42	62-22175-44
252,000	225,000	**9**	62-22175-40	62-22175-42	62-22175-43	62-22175-44	62-22175-40	62-22175-42
252,000	N/A	**12**	62-22175-45	62-22175-47	62-22175-48	62-22175-49	62-22175-45	N/A
290,000	N/A	**14**	62-22175-45	62-22175-47	62-22175-48	62-22175-49	62-22175-45	N/A
300,000	270,000	**12**	62-22175-42	62-22175-43	62-22175-44	62-22175-45	62-22175-42	62-22175-44
330,000	N/A	**14**	62-22175-43	62-22175-44	62-22175-45	62-22175-47	62-22175-43	N/A
350,000	315,000	**14**	62-22175-42	62-22175-43	62-22175-44	62-22175-45	62-22175-42	62-22175-44
400,000	360,000	**14**	62-22175-40	62-22175-42	62-22175-43	62-22175-44	62-22175-40	62-22175-42

PACKAGE EQUIPMENT - ORIFICE SELECTION CHART - LP

CAUTION: Selection of the correct LP Orifice requires the following information for the specific installation:
1) Furnace Input Rating (BTU/HR)
2) Number of Burners
2) Altitude (ft.)
For detailed information and instructions for Orifice selection, see the Gas Furnace LP Conversion Kit Index 92-21519-47 and the latest edition of the National Fuel Gas Code Handbook, or the National Standard of Canada, Natural Gas and Propane Installation Code, CAN B149.1.

CAUTION: This information is provided for replacement purposes only. Conversion to LP or for operation at High Altitude should be done using the kit(s) specified on the product specification sheet for the unit.

NOTE: This Orifice sizing chart is developed using the specified pressure setting of 10 in. water column instead of the 11.0 in water column used by the NFG and CANB149.1.

NOTE: Orifices supplied in the LP Conversion Kit are calculated and sized based on a heating value of 2500 BTU/cu. ft. and an elevation of 0 - 2000 ft.

Furnace Input Rating (BTU/HR)	Canadian High Altitude Derated Input (BTU/HR)	Number of Burners	Elevation (ft.) Country					
			0 - 2000 U.S.	2001 - 4000 U.S.	4001 - 6000 U.S.	8000+ U.S.	0 - 2000 Canada	2001 - 4500 Canada
40,000	36,000	**2**	62-22175-55	62-22175-55	62-22175-56	62-22175-56	62-22175-55	62-22175-13
60,000	54,000	**3**	62-22175-55	62-22175-55	62-22175-56	62-22175-56	62-22175-55	62-22175-13
72,000	N/A	**4**	62-22175-13	62-22175-57	62-22175-57	62-22175-59	62-22175-13	N/A
80,000	72,000	**4**	62-22175-55	62-22175-55	62-22175-56	62-22175-56	62-22175-55	62-22175-13
90,000	N/A	**5**	62-22175-13	62-22175-57	62-22175-57	62-22175-59	62-22175-13	N/A
100,000	90,000	**5**	62-22175-55	62-22175-55	62-22175-56	62-22175-56	62-22175-55	62-22175-13
120,000	108,000	**6**	62-22175-55	62-22175-55	62-22175-56	62-22175-56	62-22175-55	62-22175-13
135,000	121,500	**6**	62-22175-54	62-22175-55	62-22175-55	62-22175-56	62-22175-54	62-22175-55
150,000	135,000	**6**	62-22175-54	62-22175-55	62-22175-55	62-22175-56	62-22175-54	62-22175-54
180,000	N/A	**9**	62-22175-55	62-22175-55	62-22175-56	62-22175-56	62-22175-55	N/A
210,000	N/A	**9**	62-22175-54	62-22175-55	62-22175-55	62-22175-56	62-22175-54	N/A
210,000	N/A	**10**	62-22175-55	62-22175-55	62-22175-56	62-22175-56	62-22175-55	N/A
225,000	202,500	**9**	62-22175-54	62-22175-55	62-22175-55	62-22175-56	62-22175-54	62-22175-54
250,000	225,000	**10**	62-22175-54	62-22175-55	62-22175-55	62-22175-56	62-22175-54	62-22175-54
252,000	225,000	**9**	62-22175-53	62-22175-54	62-22175-54	62-22175-55	62-22175-53	62-22175-54
252,000	N/A	**12**	62-22175-55	62-22175-55	62-22175-56	62-22175-56	62-22175-55	N/A
290,000	N/A	**14**	62-22175-55	62-22175-55	62-22175-56	62-22175-56	62-22175-55	N/A
300,000	270,000	**12**	62-22175-54	62-22175-55	62-22175-55	62-22175-56	62-22175-54	62-22175-54
330,000	N/A	**14**	62-22175-54	62-22175-55	62-22175-55	62-22175-56	62-22175-54	N/A
350,000	315,000	**14**	62-22175-54	62-22175-55	62-22175-55	62-22175-56	62-22175-54	62-22175-54
400,000	360,000	**14**	62-22175-53	62-22175-54	62-22175-54	62-22175-55	62-22175-53	62-22175-54

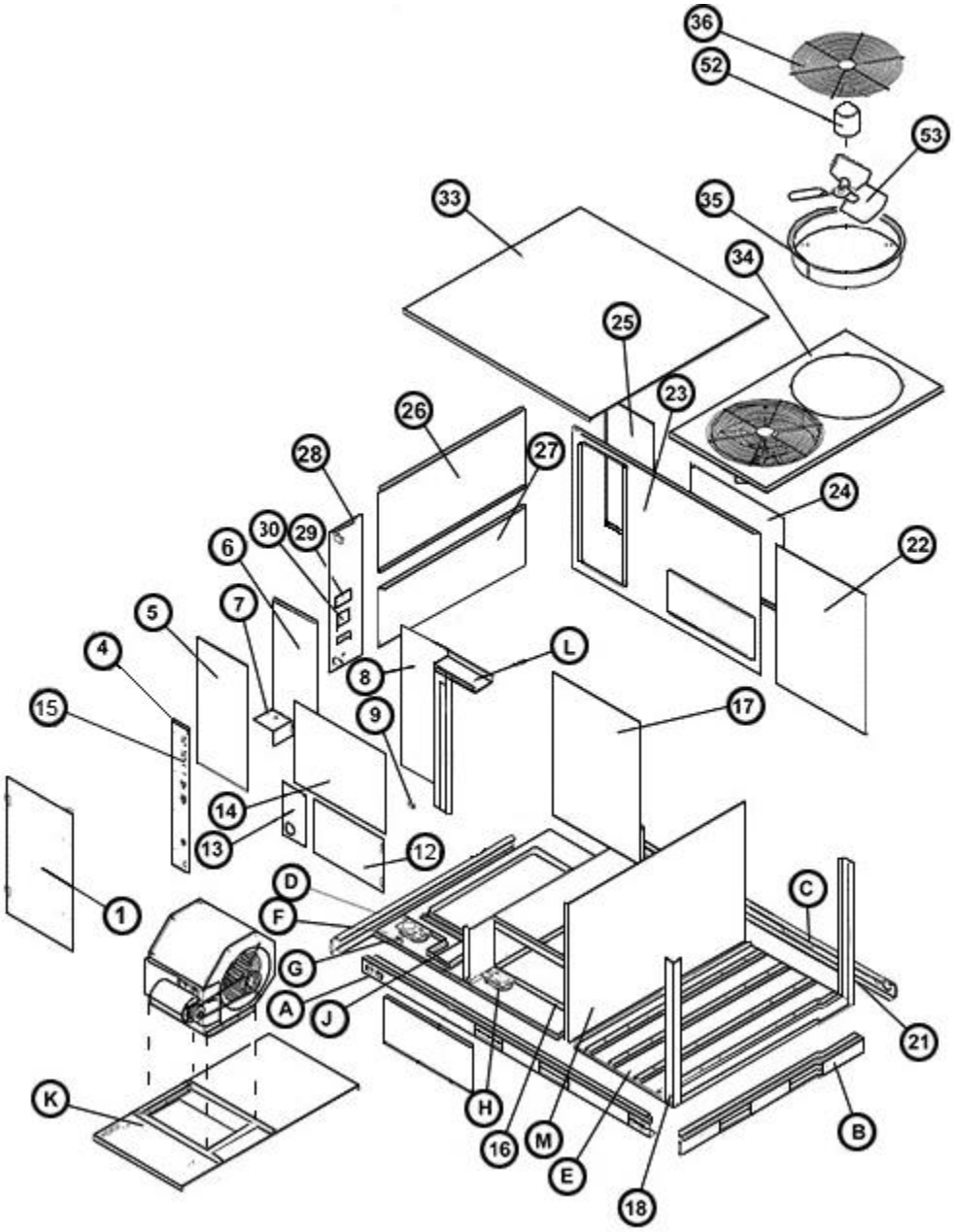

Exploded View 072-151

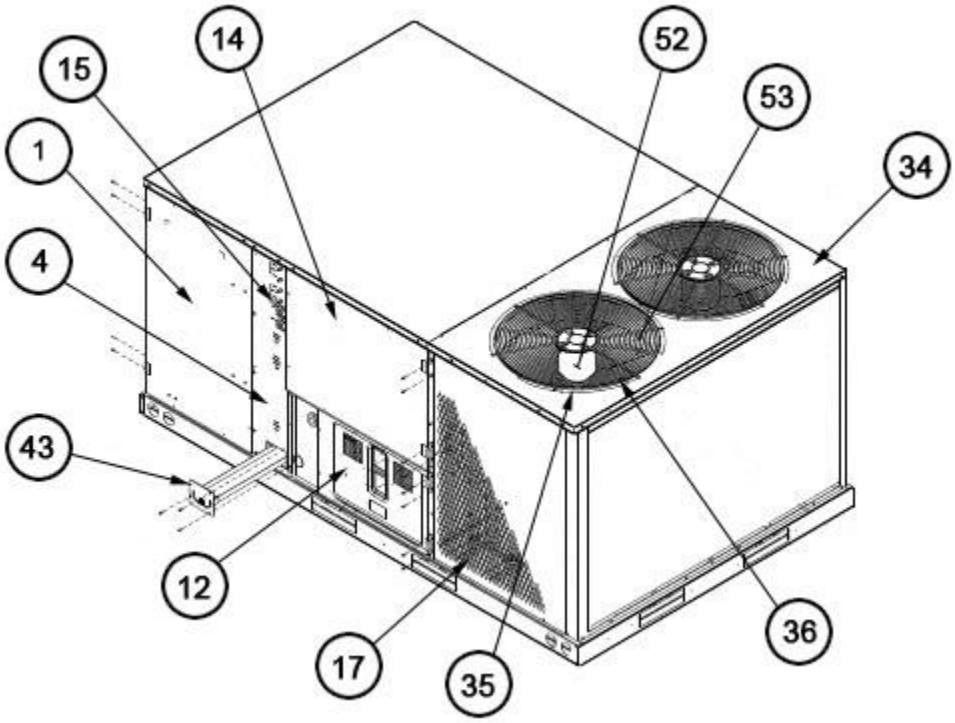

Exterior - Front 072-151

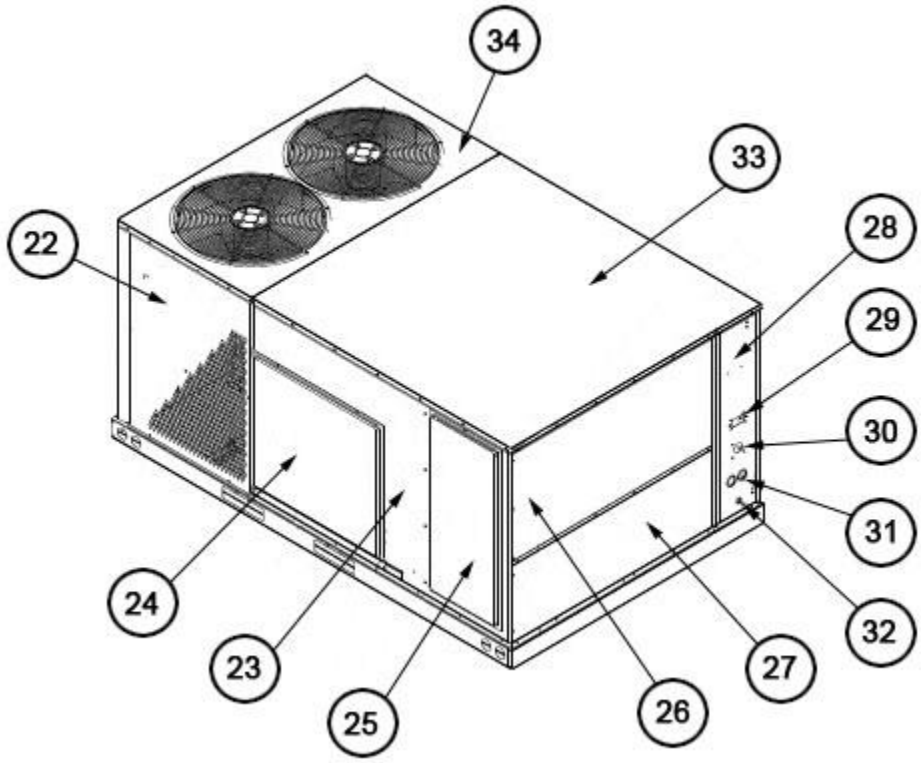

Exterior - Back 072-151

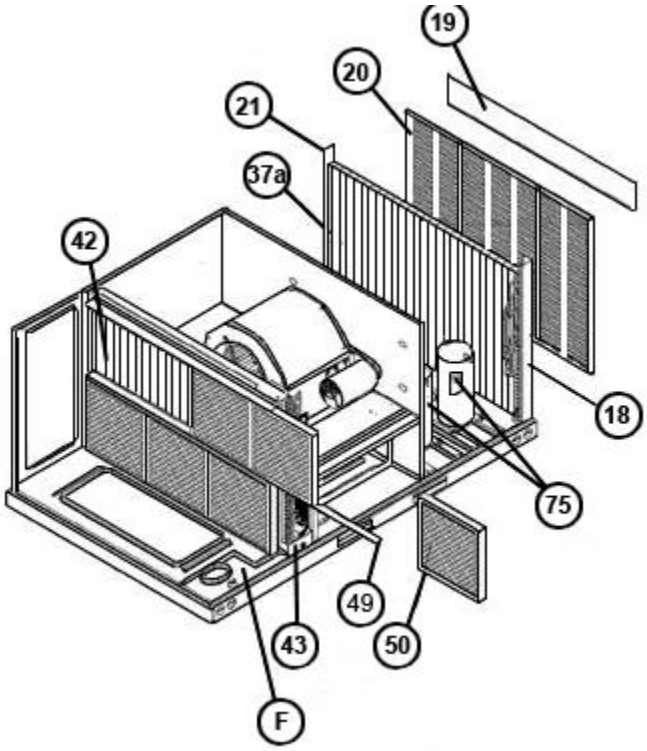

Filter-Coil Assembly 072-151

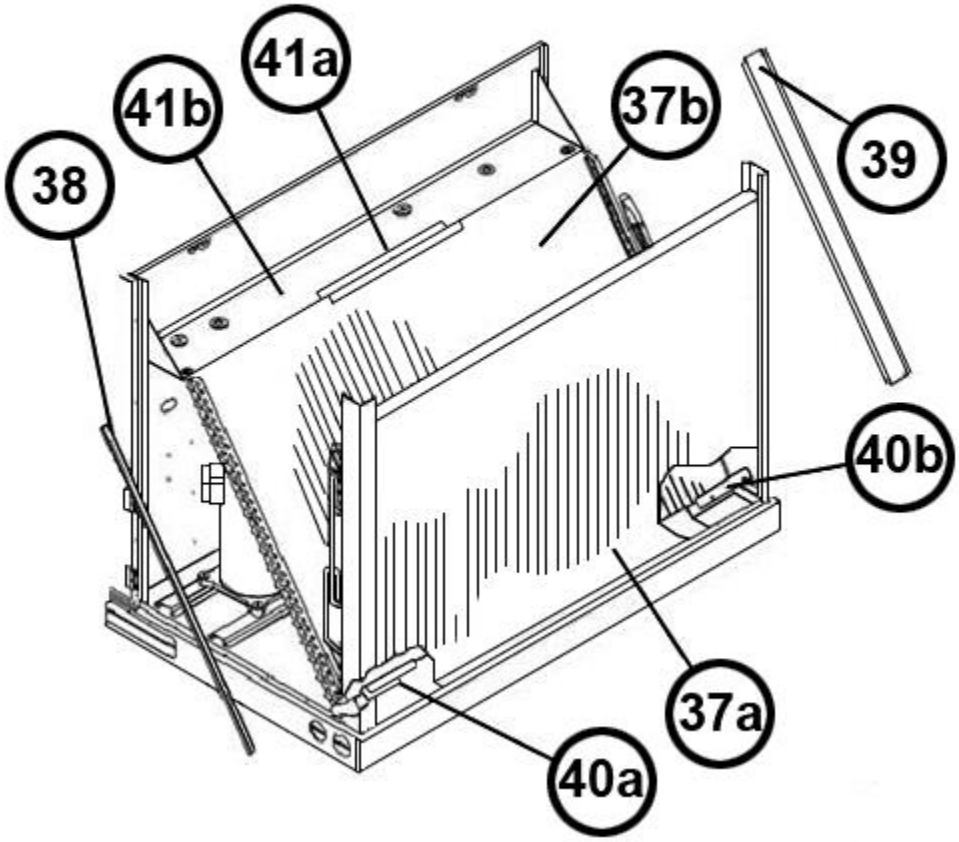

Condenser Coil Assembly 072-151

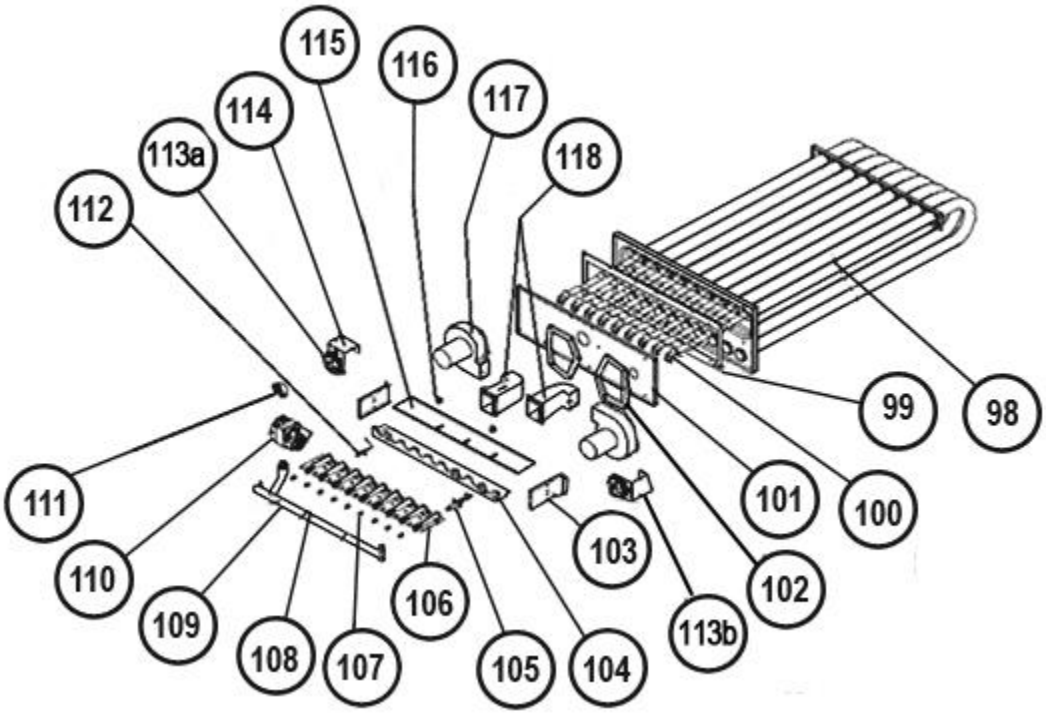

Heat Exchanger Assembly 072-151

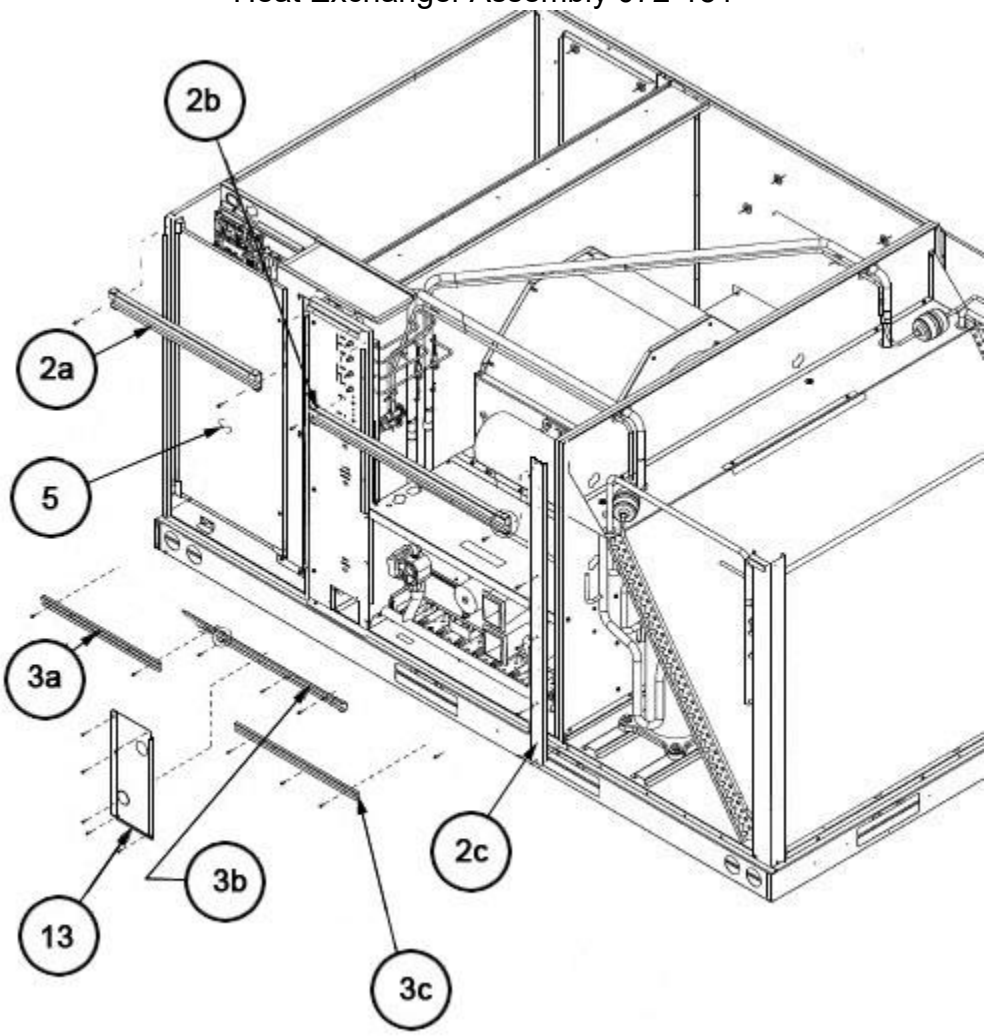

Front Panel Brackets 072-151

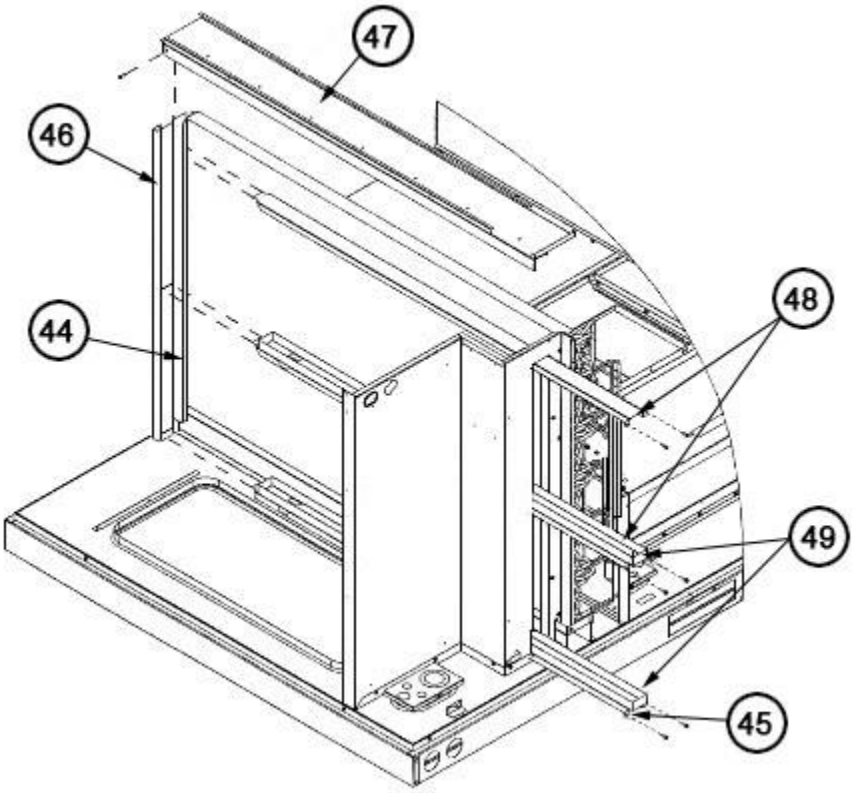

Filter Frame Assembly 072-151

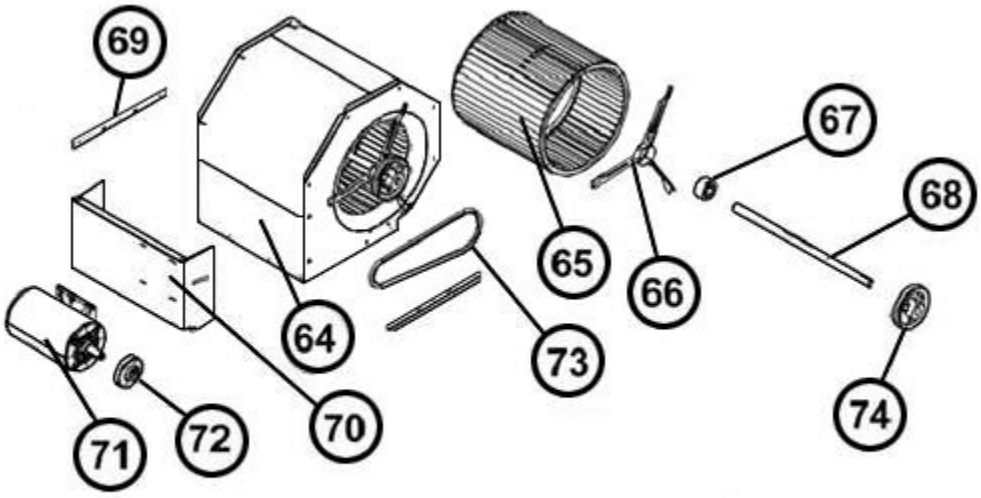

Blower Assembly 072-151

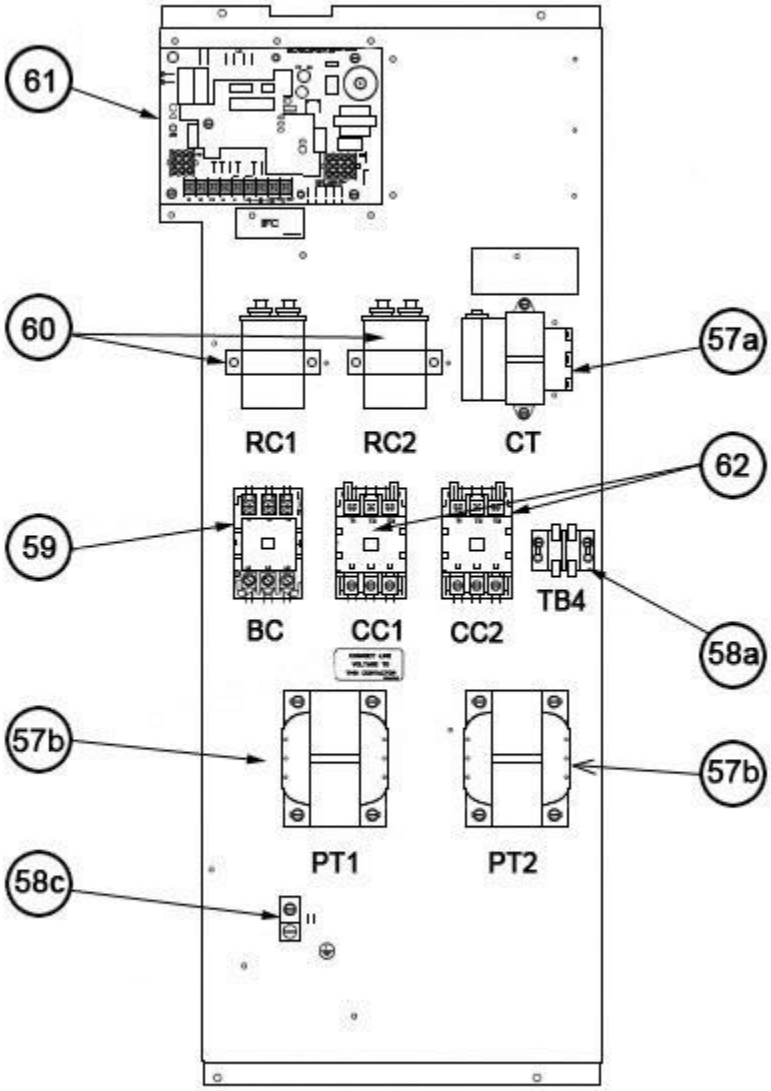

Control Box 072-151

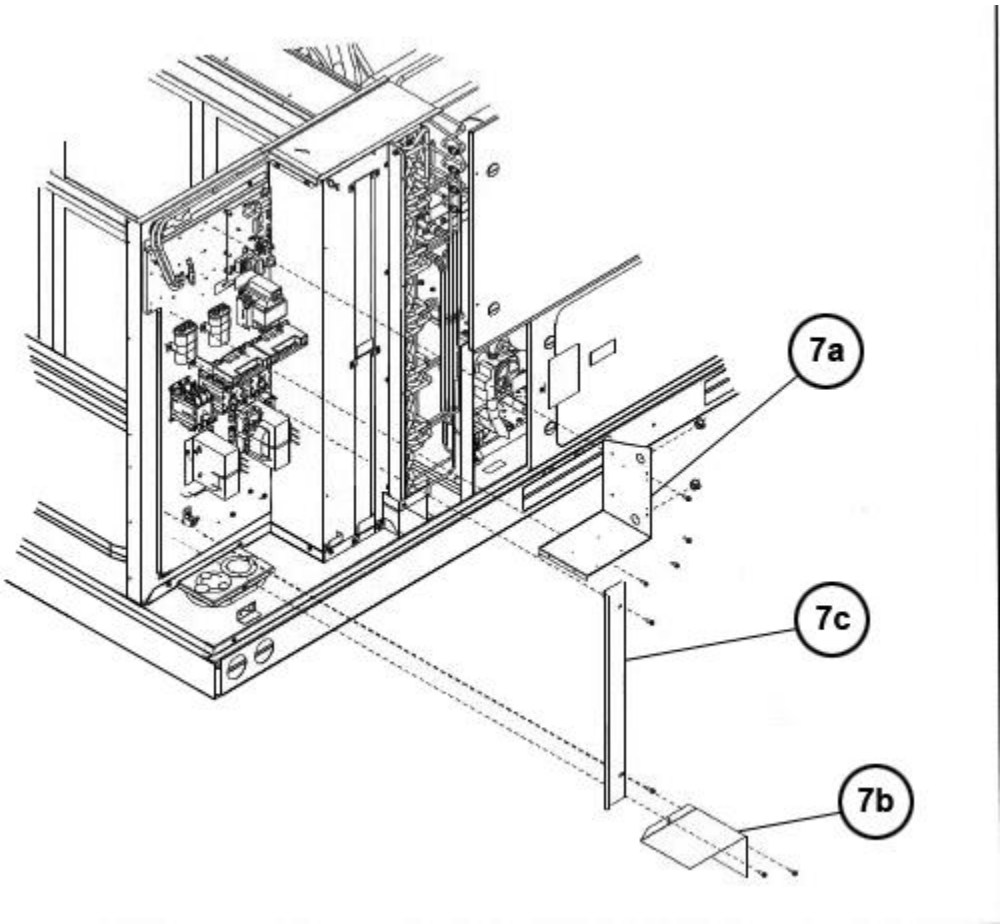

Low Voltage Shields 072-151

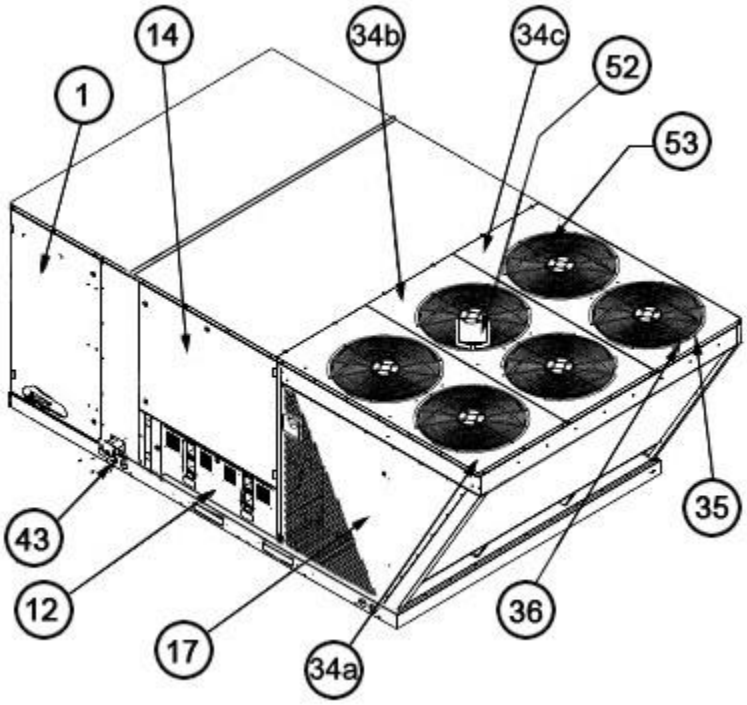

Exterior - Front 180-300

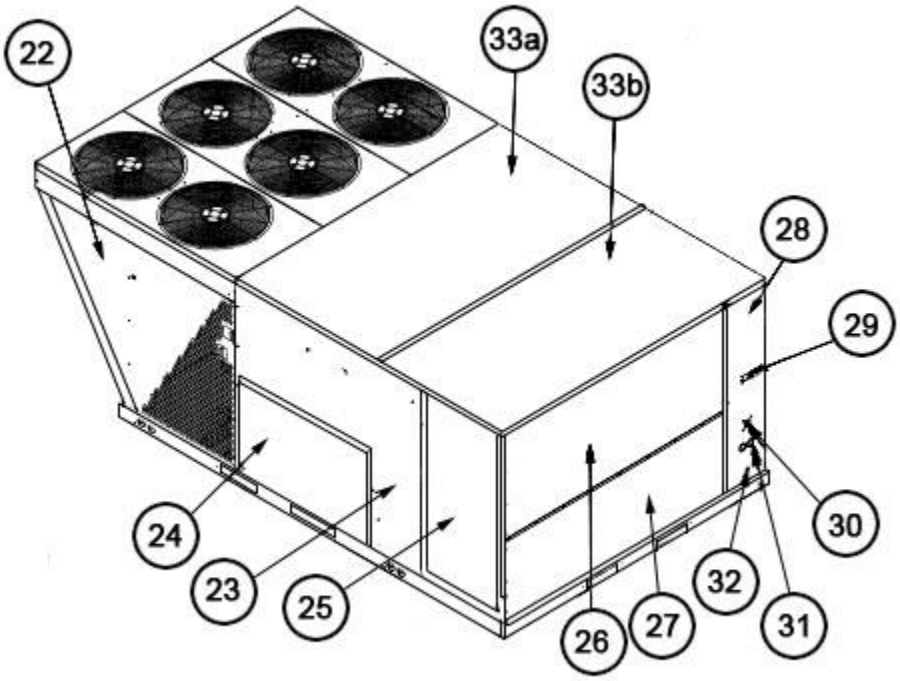

Exterior - Rear 180-300

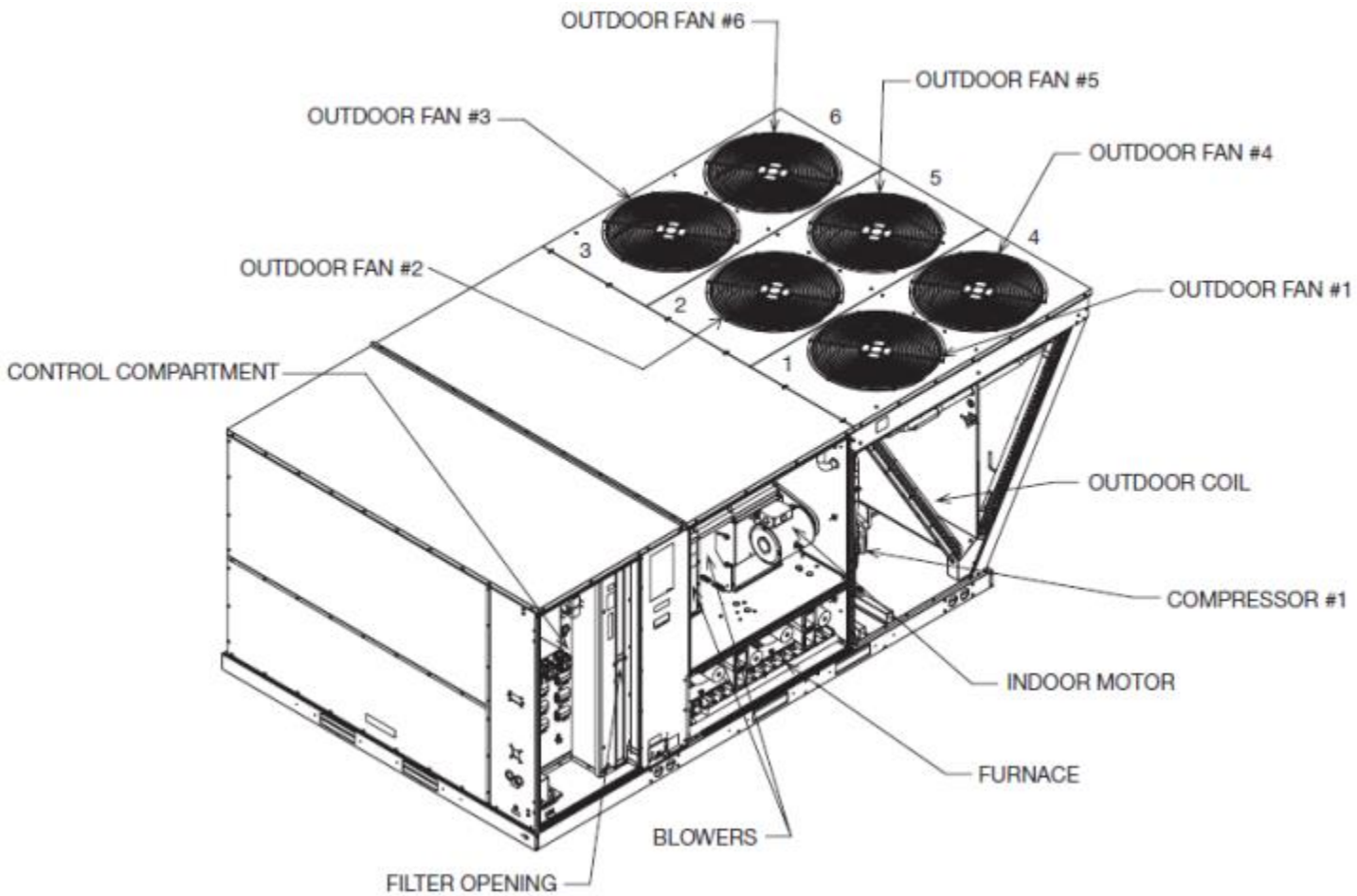

Fan Location 180-300

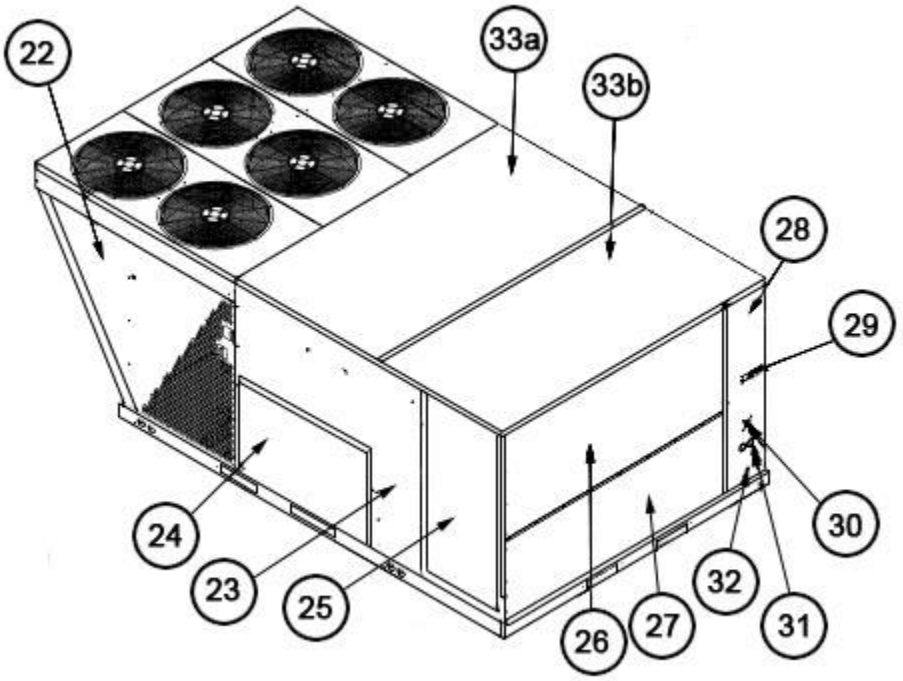

Exterior - Rear 180-300

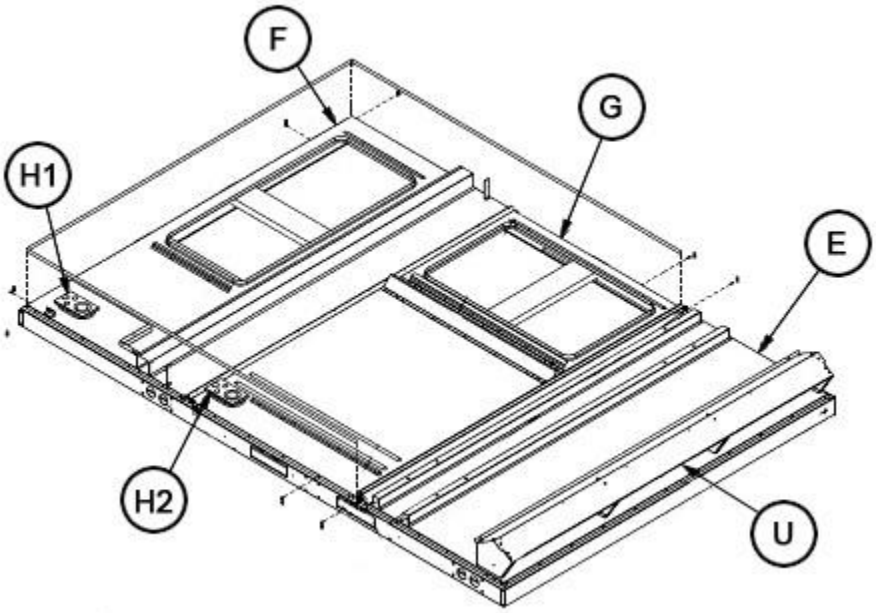

Base Pan Assembly 180-300

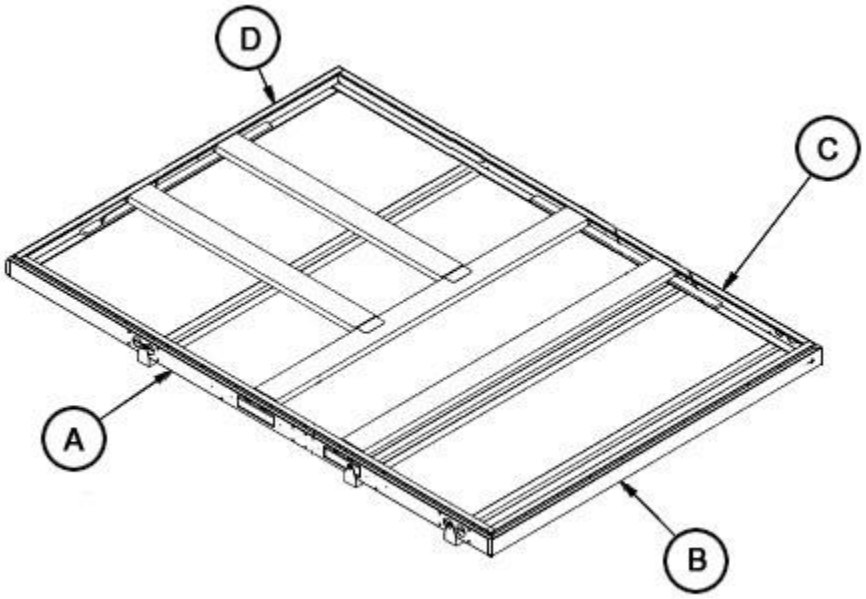

Base Rail Assembly 180-300

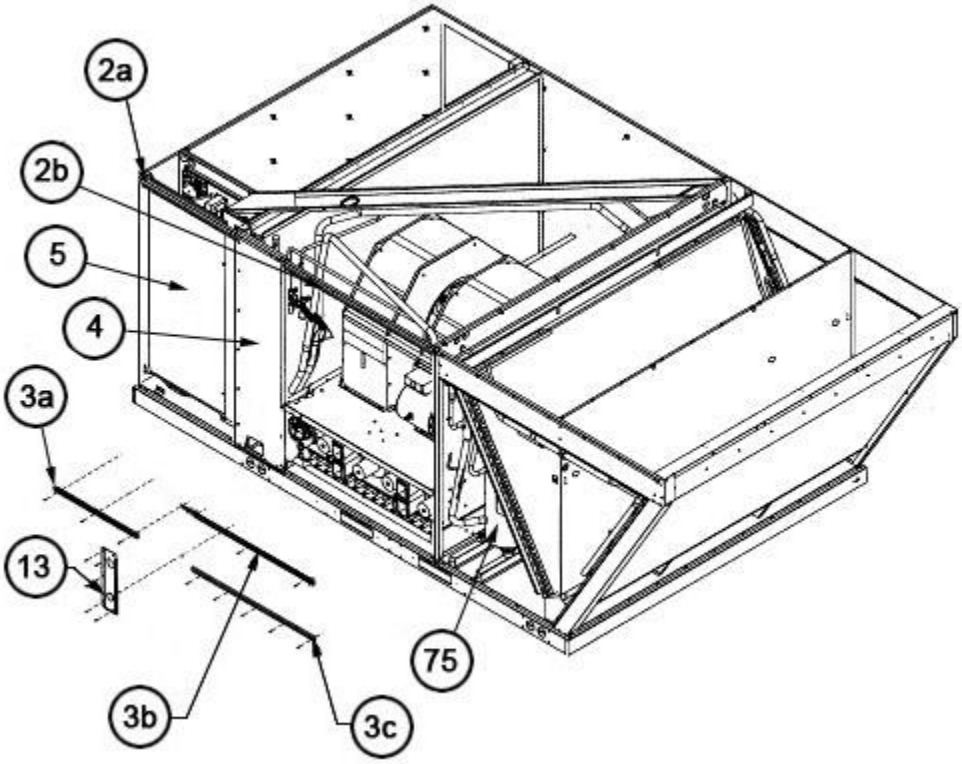

Front Panel Brackets 180-300

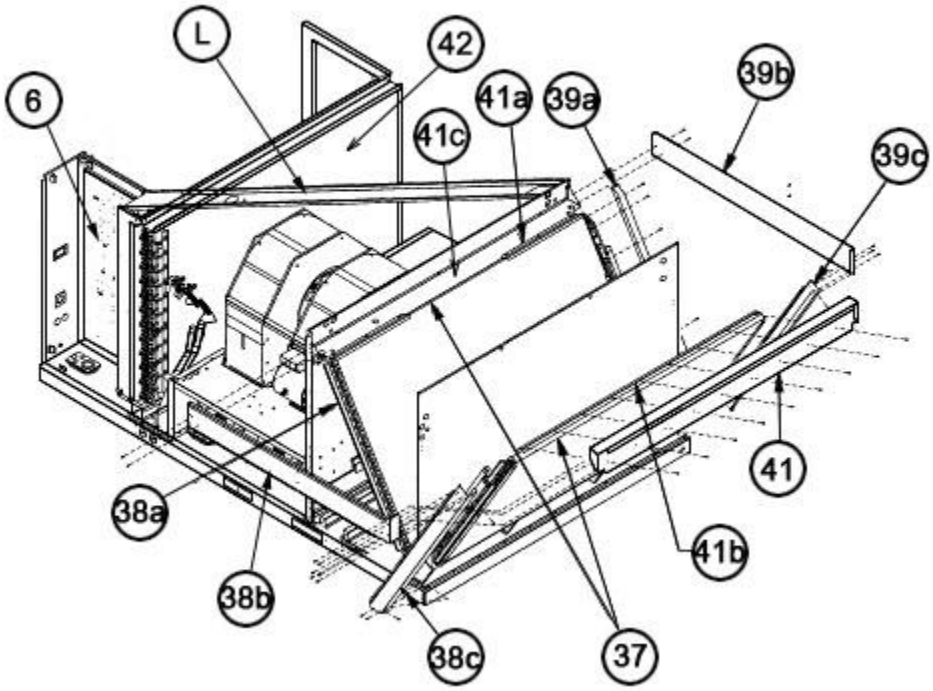

Interior - Coil 180-300

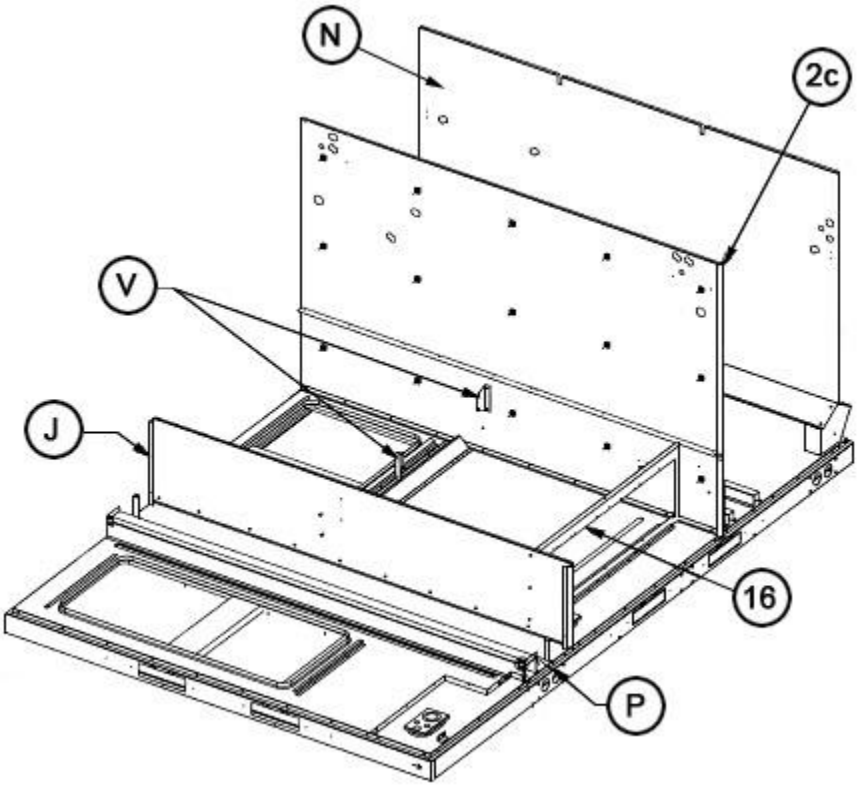

Heat Compartment 180-300

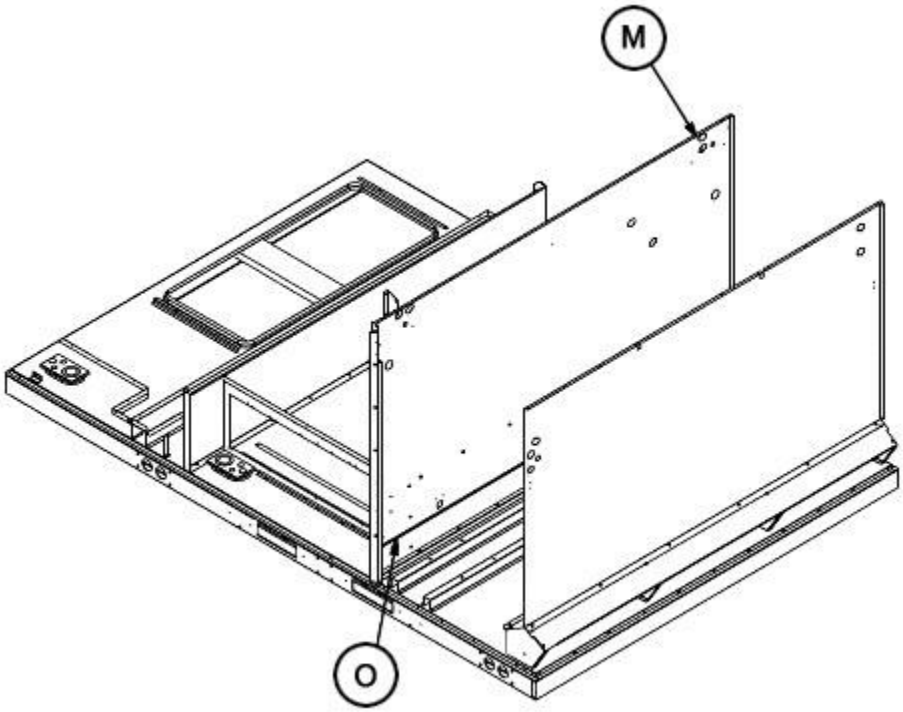

Condenser Bulkhead 180-300

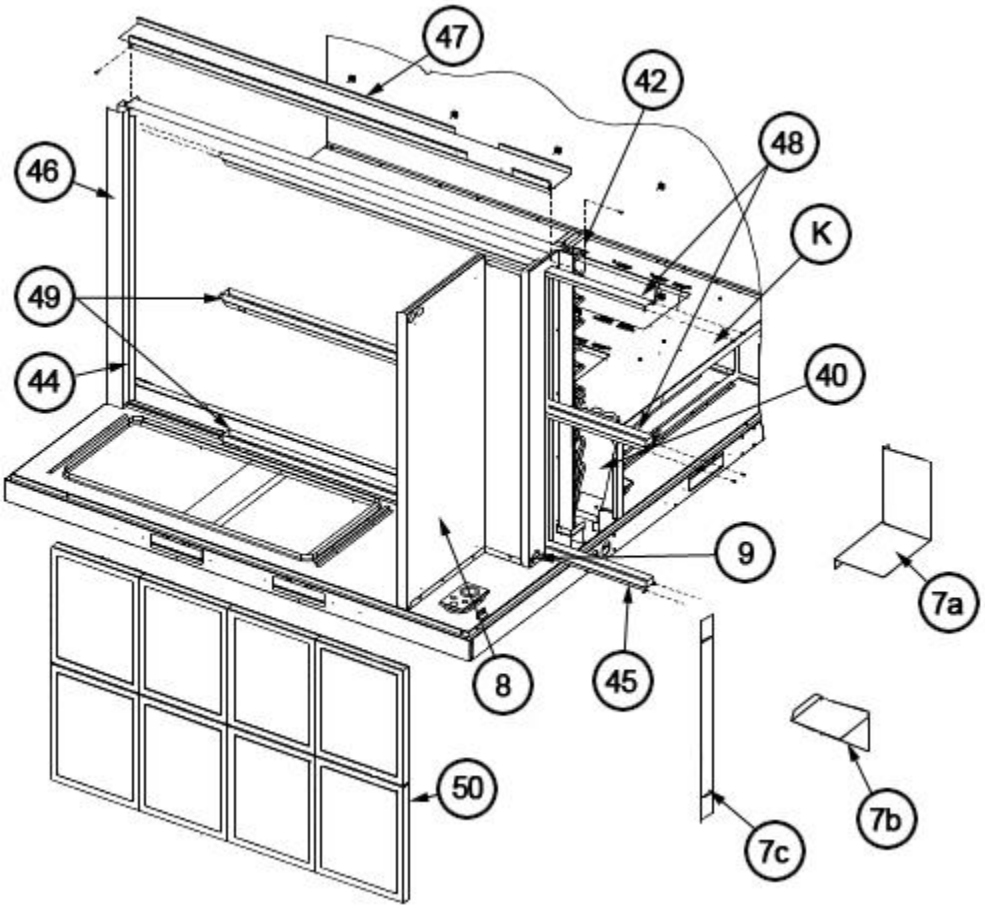

Filter Frame - Low Voltage Shields 180-300

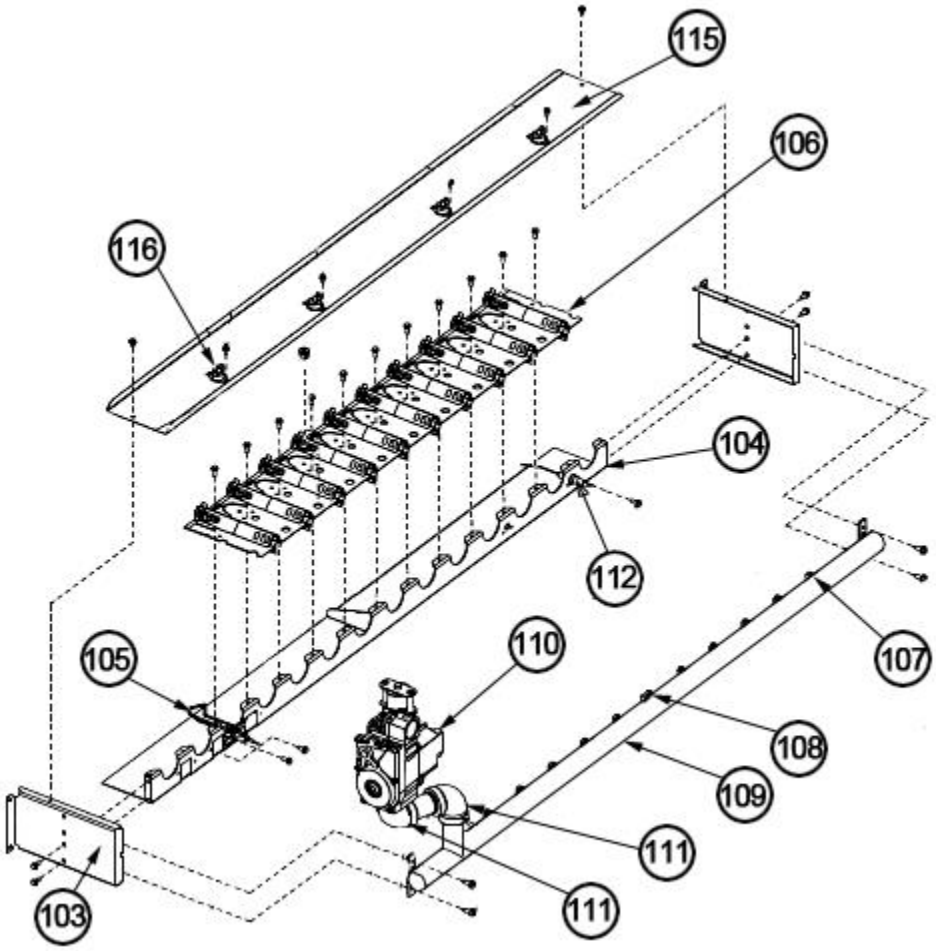

Burner Assembly 180-300

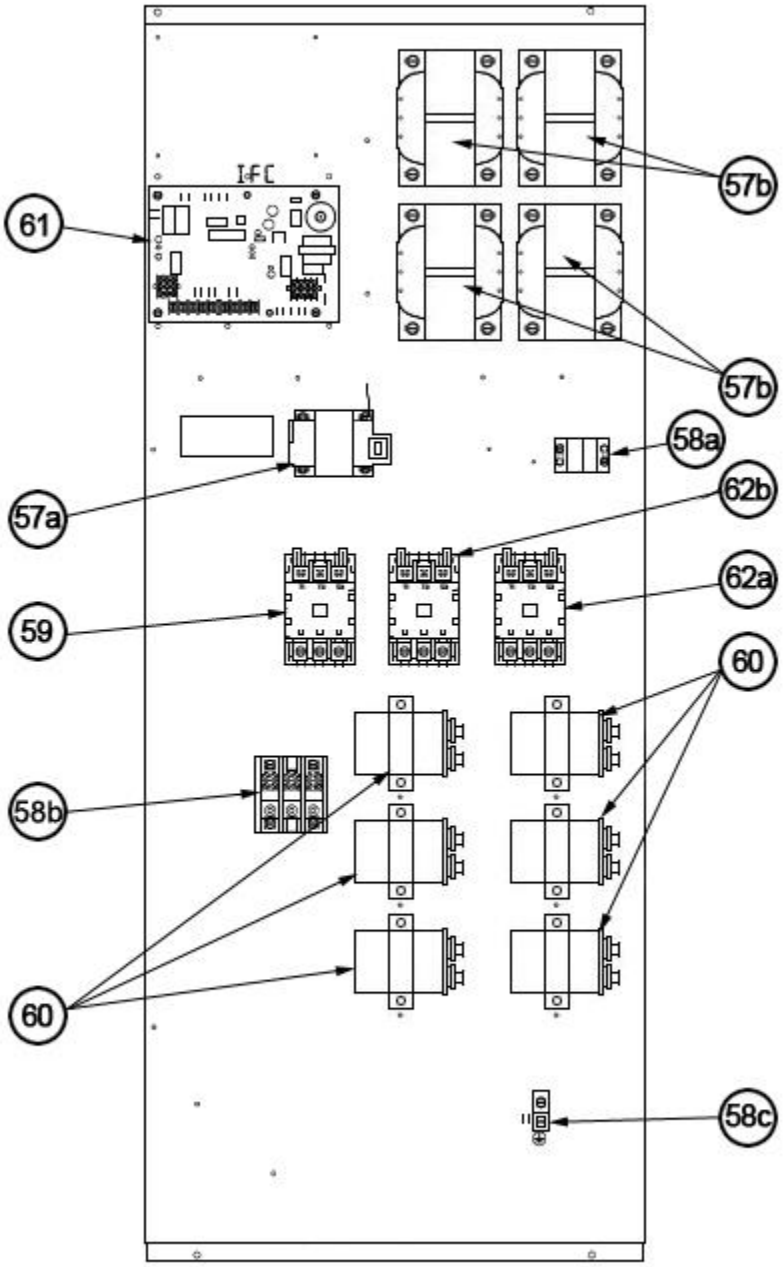

Control Box 180-300

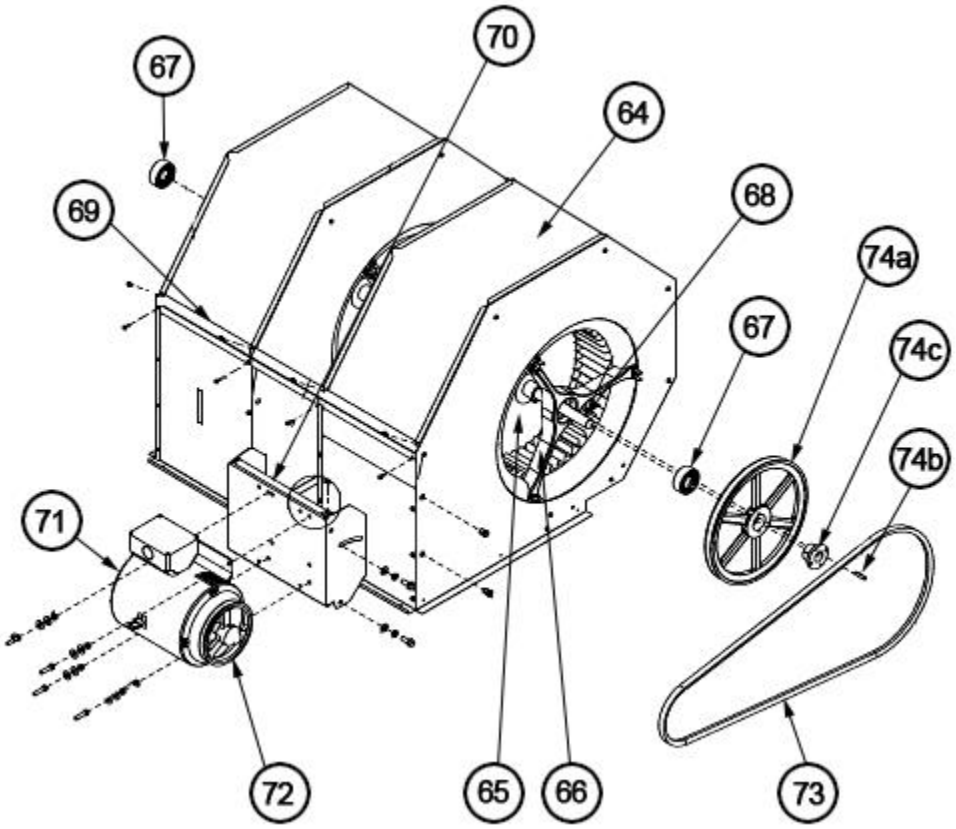

Blower Assembly 180-300

NOTES

Stk	It is recommended that stock be maintained for this part.
N/A	Not Applicable
1	Order the specified LP Conversion Kit.
2	Order Gas Valve for Natural Gas along with LP Conversion Kit.
3	The specified replacement pressure switch may have a different pressure setting than that originally supplied.
4	On approximate Date Code 0213, the wire screens were removed from the Gas Heat Door inlet hood openings. If replacing the door on a unit manufactured after this date, new Inlet Flue Hoods (AE-90745-04) should be ordered. The new inlet hoods incorporate louvers to prevent entry of debris into the combustion chamber.

DISCLAIMER: This document is intended to provide general replacement parts information to aid qualified service personnel in the repair of these models. The complete Model and Serial Number of the unit under repair should be specified when selecting and ordering replacement parts. Specifications and illustrations are subject to change without notice. Document 92-42800-RKNL-B supersedes all previous parts lists for these models. See http://www.rheempartslists.net/92-42800-RKNL-B for the latest revision of this document. The manufacturer assumes no obligation for errors or omissions. Service personnel must verify the proper and safe operation of equipment after the replacement of any original components.

P.O. Box 17010
Fort Smith, AR 72917-7010